Big data, Big model

--From rules to statistics

Course website

https://www.scholat.com/course/cseml2022

加入课程密码CSEML65432

Outline

- From rules to statistics
- Big Data，Big Model
- Pre-trained language model
- Pre-trained vision model
- Pre-trained multimodal model
- What else can PTMs do?

AI

- 人工智能历史回眸：达特茅斯会

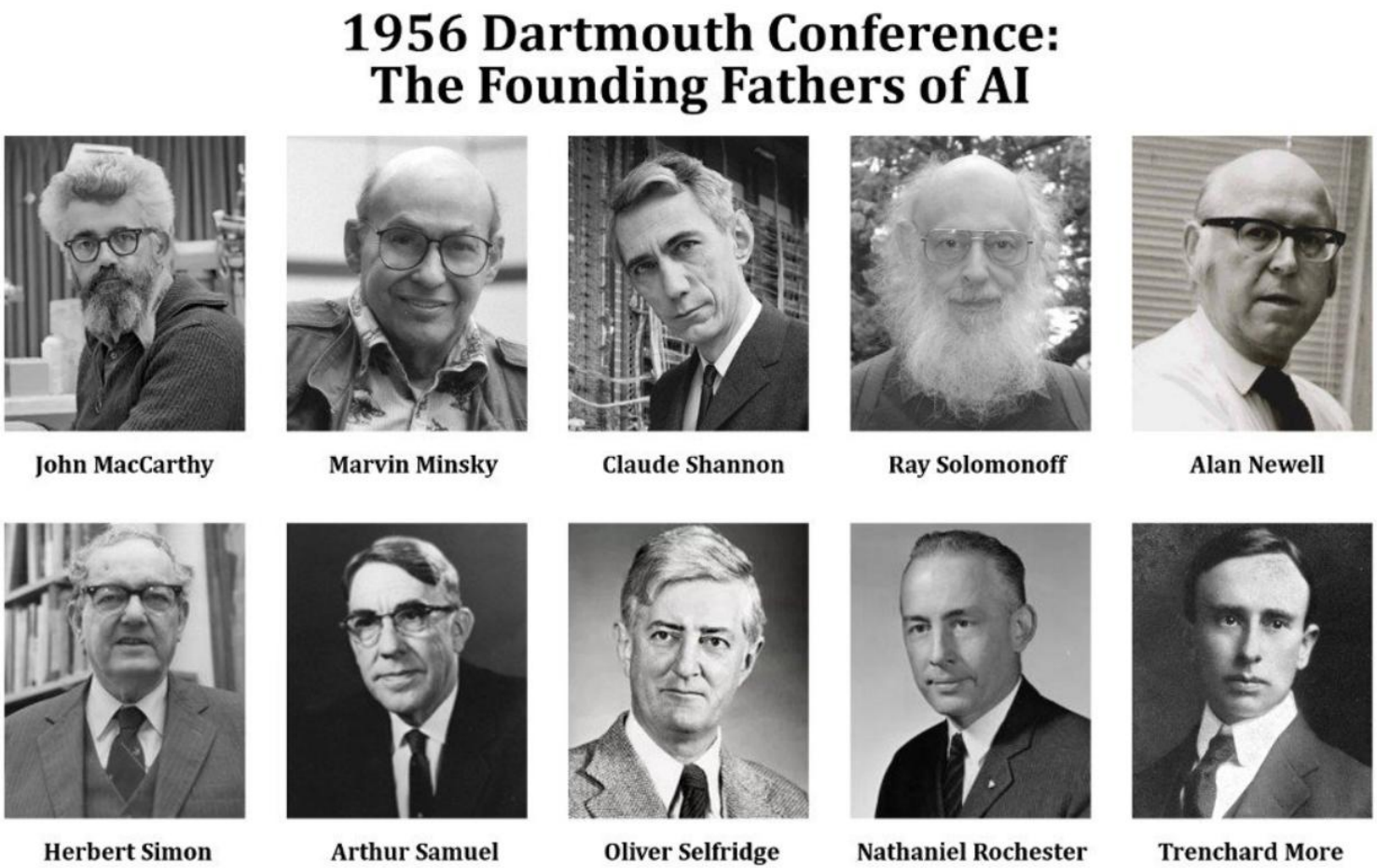

吴军 《数学之美》

- “要让机器完成翻译或语音识别这样只有人类才能做到的事情，就必须先让计算机理解自然语言，而做到这一点就必须让计算机有类似我们人类这样的智能”

吴军 《数学之美》

- 统计语言模型
- 句子一：“美联储主席昨天告诉媒体7000亿美元的救助资金将借给上百家银行、保险公司”
- 句子二：“美联储主席昨天7000亿美元的救助资金告诉媒体将借给上百家银行、保险公司”
- 句子三：“联主美储席将保险借上媒百诉给银行家昨助天亿美元的救资金告体、7000司公”

吴军 《数学之美》

- 统计语言模型：自然语言处理的基础

  广泛运用于机器翻译、语音识别、印刷体或手写体识别、 拼写纠错和汉字输入等领域。

  将自然语言建模为统计概率，而不是句法。

  用数学的方法描述语言规律

吴军 《数学之美》

$$P(w_1, w_2, \dots, w_n)$$
$$= P(w_1) \cdot P(w_2|w_1) \cdot P(w_3|w_1, w_2) \cdots P(w_n|w_1, w_2, \dots, w_{n-1}) \quad (3.2)$$

其中$P(w_1)$表示第一个词 w_1 出现的概率[1]；$P(w_2|w_1)$是在已知第一个词的前提下，第二个词出现的概率；以此类推。不难看出，到了词 w_n，它的出现概率取决于它前面的所有词。

Types of Language Models

- **Unigram LM** based on only **single words** (unigrams), considers **no context**, and assumes **independent generation** of words

$$P(\langle t_1, \ldots, t_m \rangle) = \prod_{i=1}^{m} P(t_i)$$

- **Bigram LM** conditions on the preceding term

$$P(\langle t_1, \ldots, t_m \rangle) = P(t_1) \prod_{i=2}^{m} P(t_i | t_{i-1})$$

- ***n*-Gram LM** conditions on the preceding (*n*-1) terms

$$P(\langle t_1, \ldots, t_m \rangle) = P(t_1)\, P(t_2 | t_1) \ldots \prod_{i=n}^{m} P(t_i | t_{i-n+1} \ldots t_{i-1})$$

Outline

- From rules to statistics
- Big Data，Big Model
- Pre-trained language model
- Pre-trained vision model
- Pre-trained multimodal model
- What else can PTMs do?

Big Data, Big Model

- **For DNN, one of challenges： data hungry**
  - overfit
  - poor generalization ability

- **One solution: construct high-quality datasets**
  - expensive
  - time-consuming

Key: train effective deep neural models with limited human-annotated data

Big Data, Big Model

- **An Intuitive idea : Transfer learning**

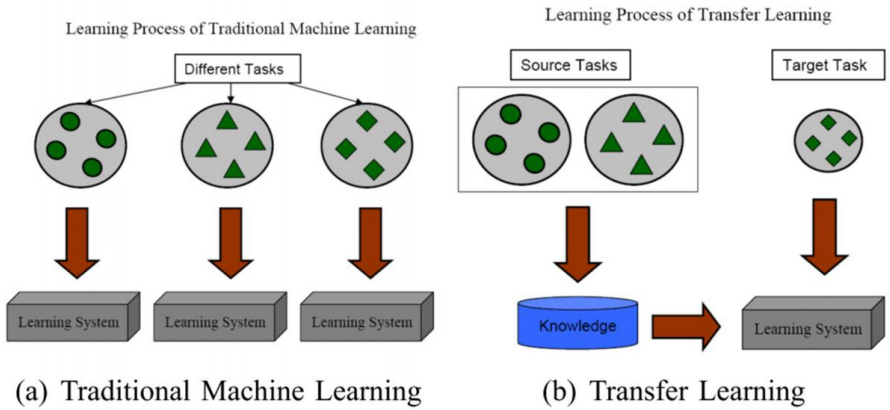

- **Two stage：**
  - **1. Pre-training on source tasks**
  - **2. Fine-tuning on target tasks**

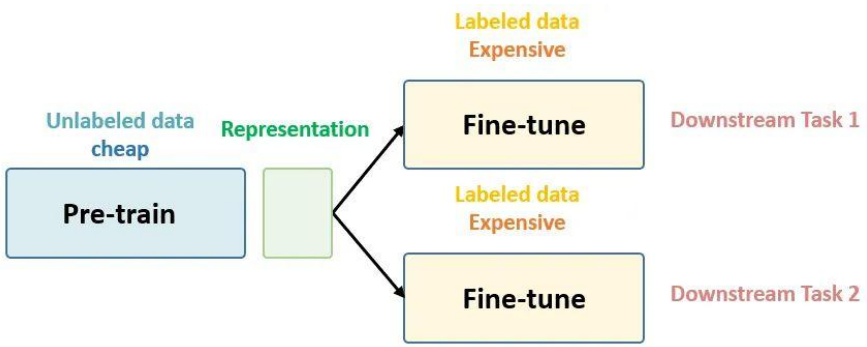

Big Data, Big Model

- **The history of pre-trained models**

1. **Vision models(based on CNNs)**

   AlexNet, VGG, ResNet

2. **Language models(based on Transformer)**

   GPT, BERT, UNILM

3. **Vision models(based on Vision Transformer)**

   MAE, MoCo, BEiT, simMIM

4. **Multimodal models**

   CLIP, BLIP

Big Data, Big Model

- Overview: Pre-trained models

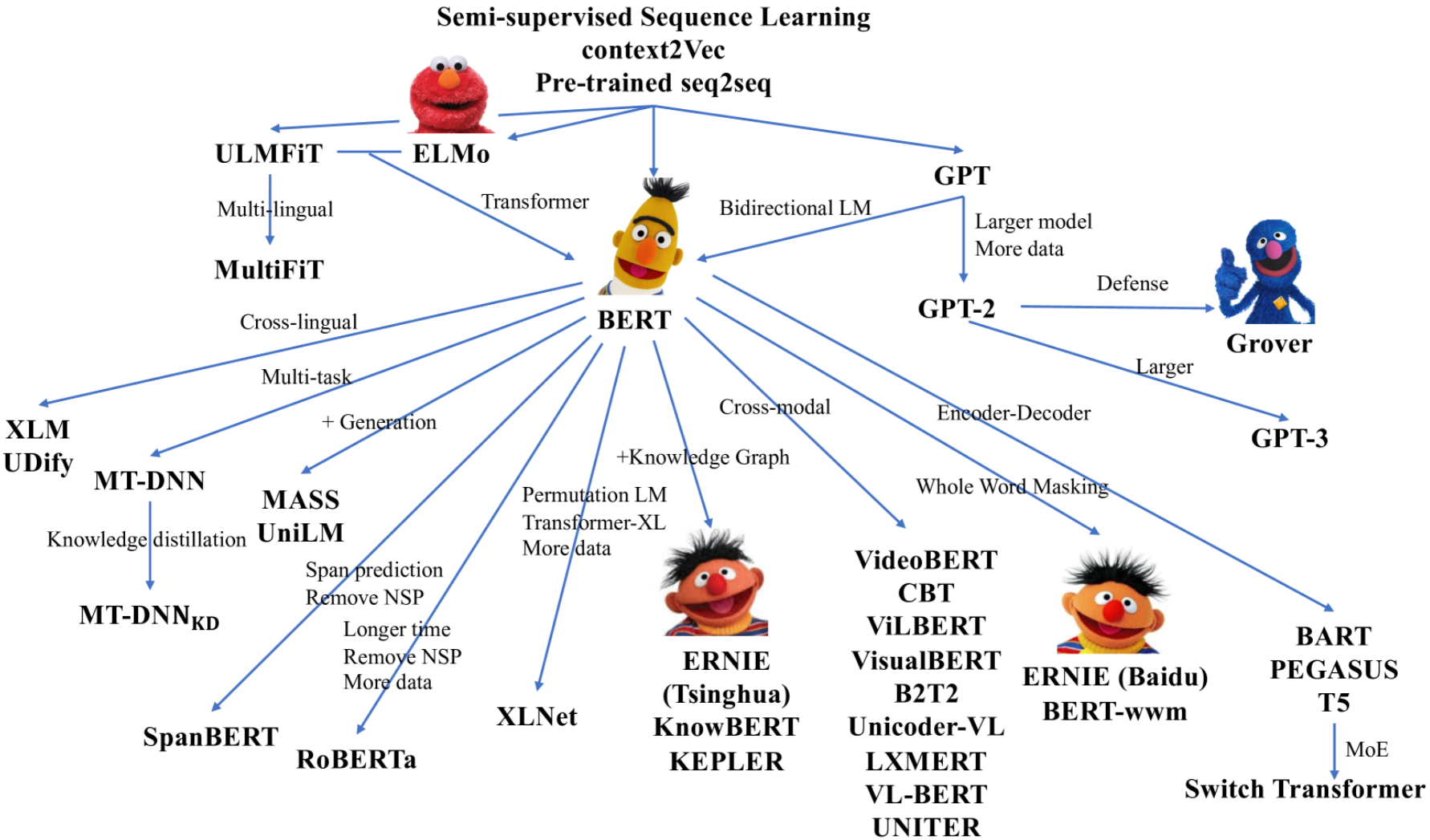

Outline

- From rules to statistics
- Big Data，Big Model
- Pre-trained language model
- Pre-trained vision model
- Pre-trained multimodal model
- What else can PTMs do?

Overview

- Overview: List of Representative PLMs

PTMs	Architecture†	Input	Pre-Training Task	Corpus	Params	GLUE‡	FT?♯
ELMo [14]	LSTM	Text	BiLM	WikiText-103			No
GPT [15]	Transformer Dec.	Text	LM	BookCorpus	117M	72.8	Yes
GPT-2 [58]	Transformer Dec.	Text	LM	WebText	117M ~ 1542M		No
BERT [16]	Transformer Enc.	Text	MLM & NSP	WikiEn+BookCorpus	110M ~ 340M	81.9*	Yes
InfoWord [55]	Transformer Enc.	Text	DIM+MLM	WikiEn+BookCorpus	=BERT	81.1*	Yes
RoBERTa [43]	Transformer Enc.	Text	MLM	BookCorpus+CC-News+OpenWebText+ STORIES	355M	88.5	Yes
XLNet [49]	Two-Stream Transformer Enc.	Text	PLM	WikiEn+ BookCorpus+Giga5 +ClueWeb+Common Crawl	≈BERT	90.5§	Yes
ELECTRA [56]	Transformer Enc.	Text	RTD+MLM	same to XLNet	335M	88.6	Yes
UniLM [44]	Transformer Enc.	Text	MLM~~+~~ NSP	WikiEn+BookCorpus	340M	80.8	Yes
MASS [41]	Transformer	Text	Seq2Seq MLM	*Task-dependent			Yes
BART [50]	Transformer	Text	DAE	same to RoBERTa	110% of BERT	88.4*	Yes
T5 [42]	Transformer	Text	Seq2Seq MLM	Colossal Clean Crawled Corpus (C4)	220M ~ 11B	89.7*	Yes
ERNIE(THU) [76]	Transformer Enc.	Text+Entities	MLM+NSP+dEA	WikiEn + Wikidata	114M	79.6	Yes
KnowBERT [77]	Transformer Enc.	Text	MLM+NSP+EL	WikiEn + WordNet/Wiki	253M ~ 523M		Yes
K-BERT [78]	Transformer Enc.	Text+Triples	MLM+NSP	WikiZh + WebtextZh + CN-DBpedia + HowNet + MedicalKG	=BERT		Yes
KEPLER [80]	Transformer Enc.	Text	MLM+KE	WikiEn + Wikidata/WordNet			Yes
WKLM [57]	Transformer Enc.	Text	MLM+ERD	WikiEn + Wikidata	=BERT		Yes
CoLAKE [81]	Transformer Enc.	Text+Triples	MLM	WikiEn + Wikidata	=RoBERTa	86.3	Yes

Architecture

- The architecture of Transformer, GPT, and BERT

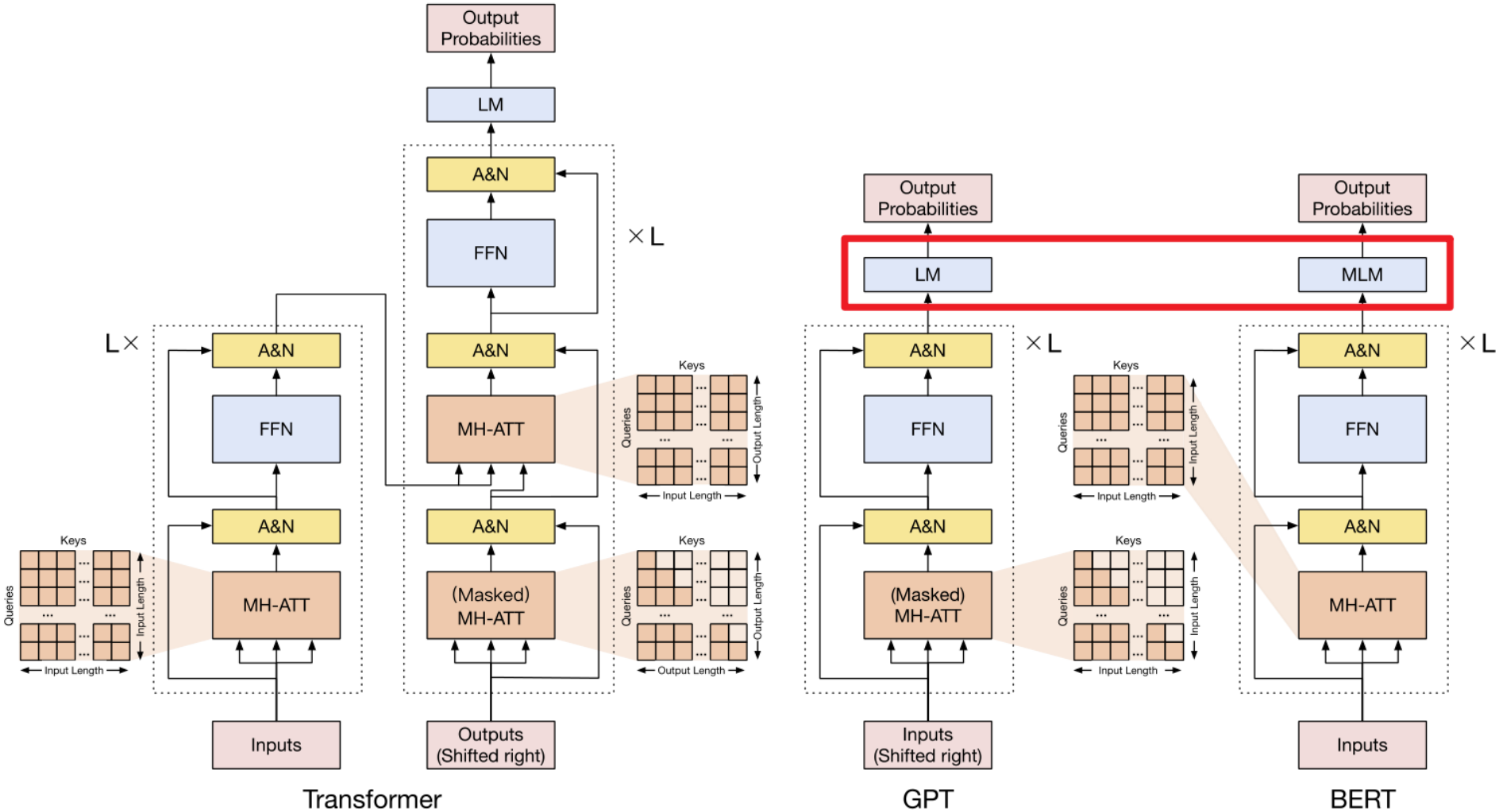

GPT

- First SOTA pre-trained language model
- From **OpenAI**
- Later: GPT-2, GPT-3, ……

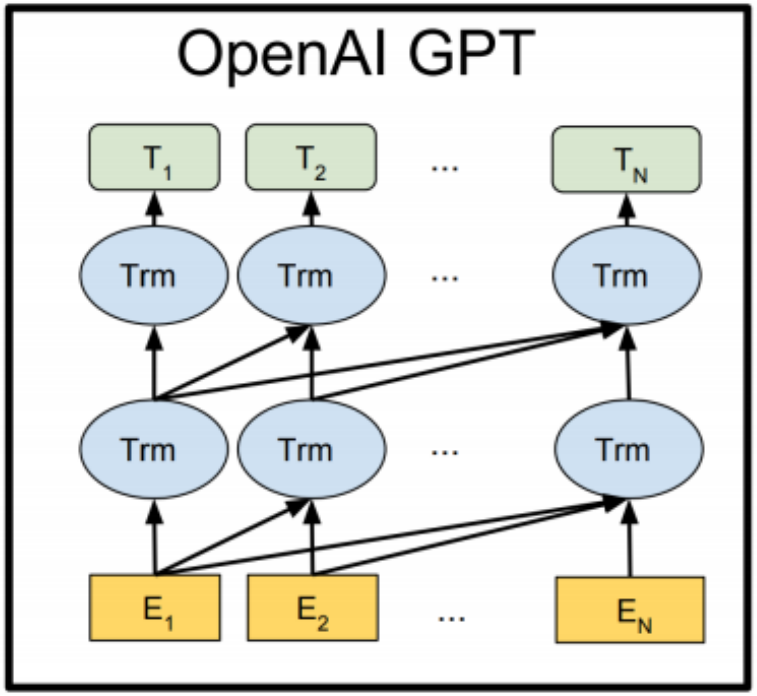

GPT

- **Stage 1:** Unsupervised pre-training
  - Unsupervised pre-training, maximising the log-likelihood

$$L_1(\mathcal{U}) = \sum_i \log P(u_i \mid u_{i-k}, \ldots, u_{i-1}; \Theta)$$

  - where $\mathcal{U} = \{u_1, \ldots, u_n\}$ is an unsupervised corpus of tokens, k is the size of context window, P is modelled as a neural network with parameters Θ.

$$h_0 = UW_e + W_p$$
$$h_l = \text{transformer}\,b\,\text{bock}(h_{l-1}) \forall i \in [1, n]$$
$$P(u) = \text{softmax}\left(h_n W_e^T\right)$$

  - where U is one-hot representation of tokens in the window, n is the total number of transformer layers, transformer_block() denotes the decoder of the Transformer model (*multi-headed self-attention and position-wise feedfoward layers*).

GPT

- **Pre-training dataset:**
  - 7000+ books

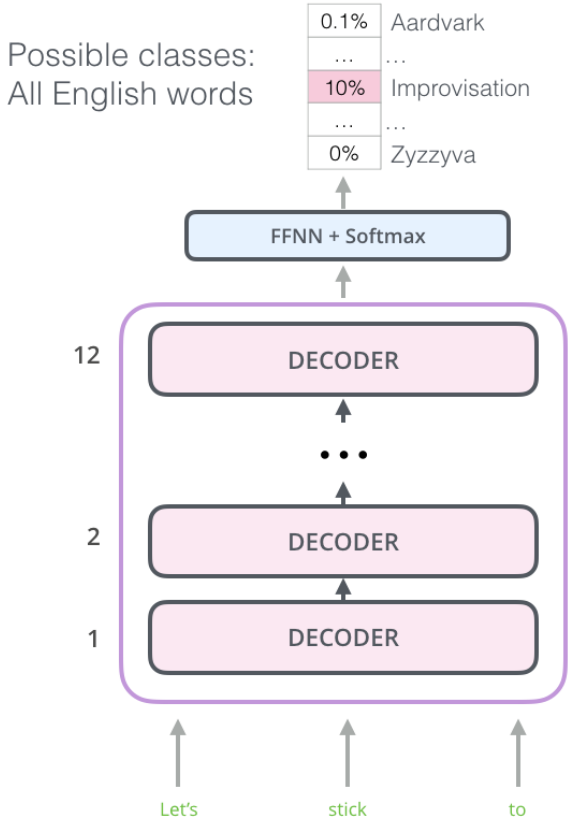

GPT

- **Stage 2:** Supervised fine-tuning
  - Given labelled data C , including each input as sequence of tokens x1,…,xm

$$P(y|x^1,\ldots,x^m) = \texttt{softmax}(h_l^m W_y)$$

$$L_2(\mathcal{C}) = \sum_{(x,y)} \log P(y|x^1,\ldots,x^m)$$

  - Then maximise the final objective function:

$$L_3(\mathcal{C}) = L_2(\mathcal{C}) + \lambda * L_1(\mathcal{C})$$

GPT

- **An example:** Transfer Learning to Downstream Tasks

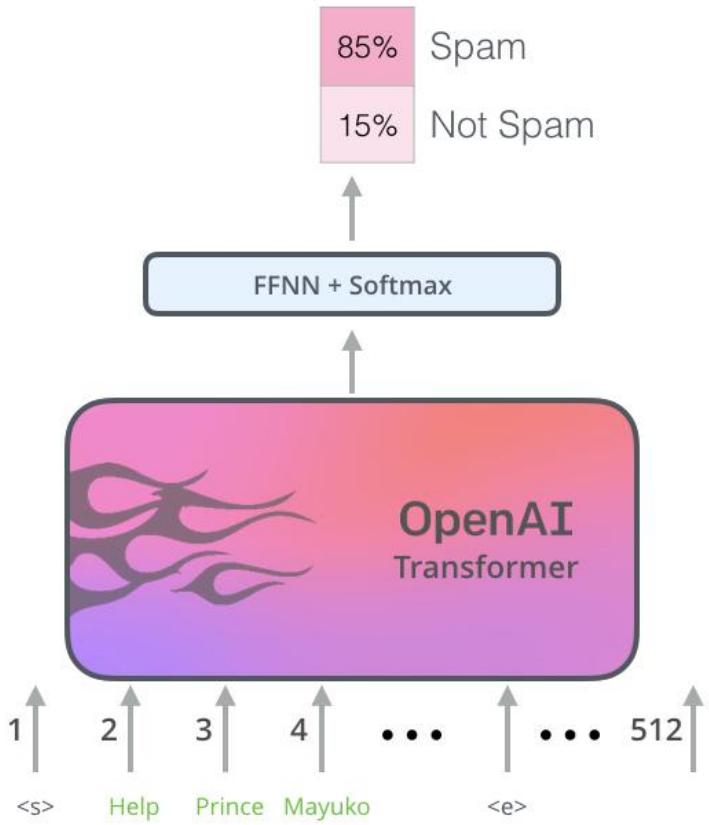

GPT

- **How to fine-tuning all tasks?**
  - **input transformation/representation**

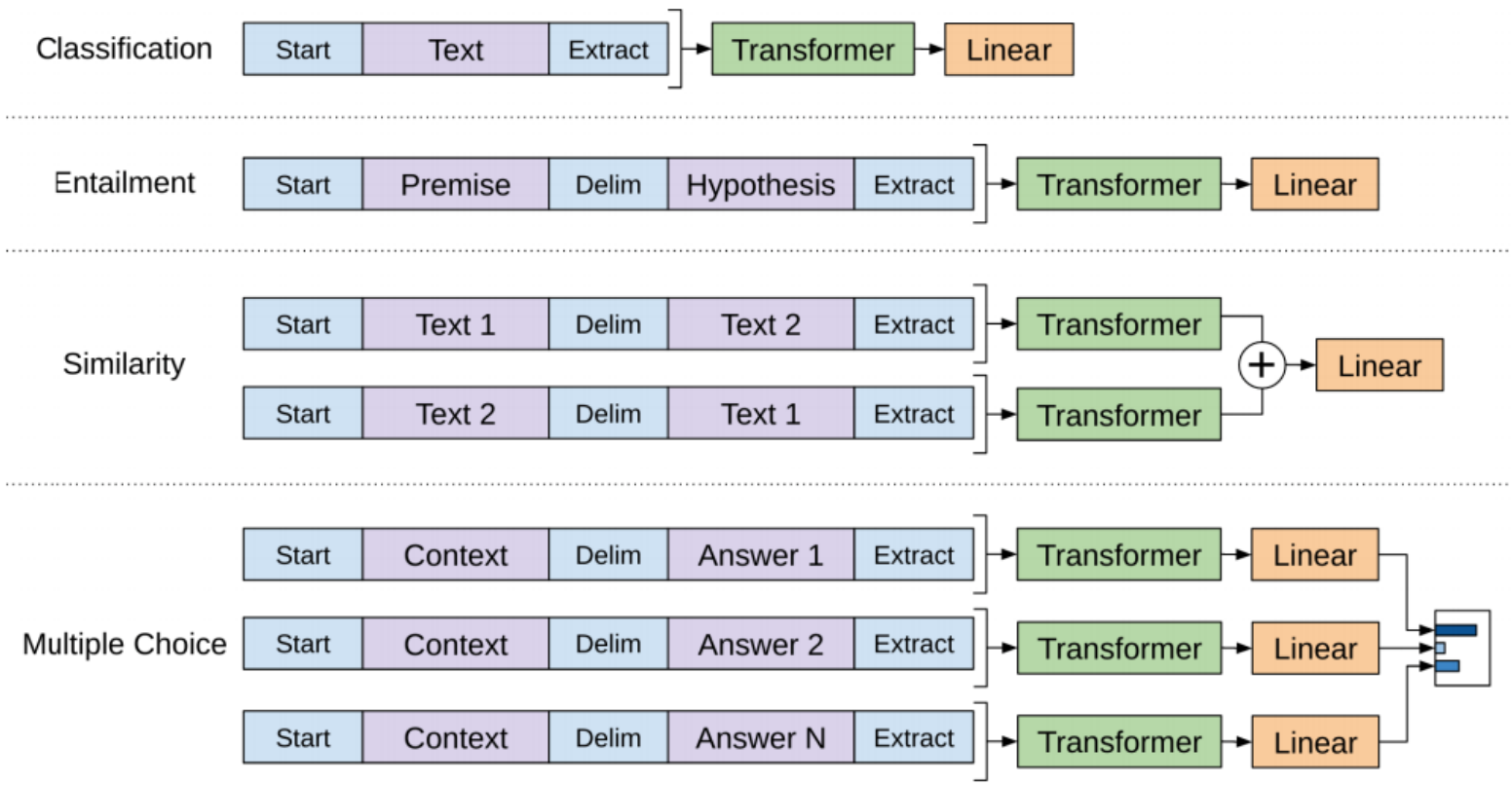

BERT

- From Decoders to Encoders
- From Google
- Two versions :base and large

$\text{BERT}_{\text{BASE}}$: $L = 12, H = 768, A = 12$, 总参数量为 110M
$\text{BERT}_{\text{LARGE}}$: $L = 24, H = 1024, A = 16$, 总参数量为 340M

- New research: 13 papers in ACL 2022

BERT

- B: Bidirectional
- E: Encoder
- R: Representations
- T: Transformers

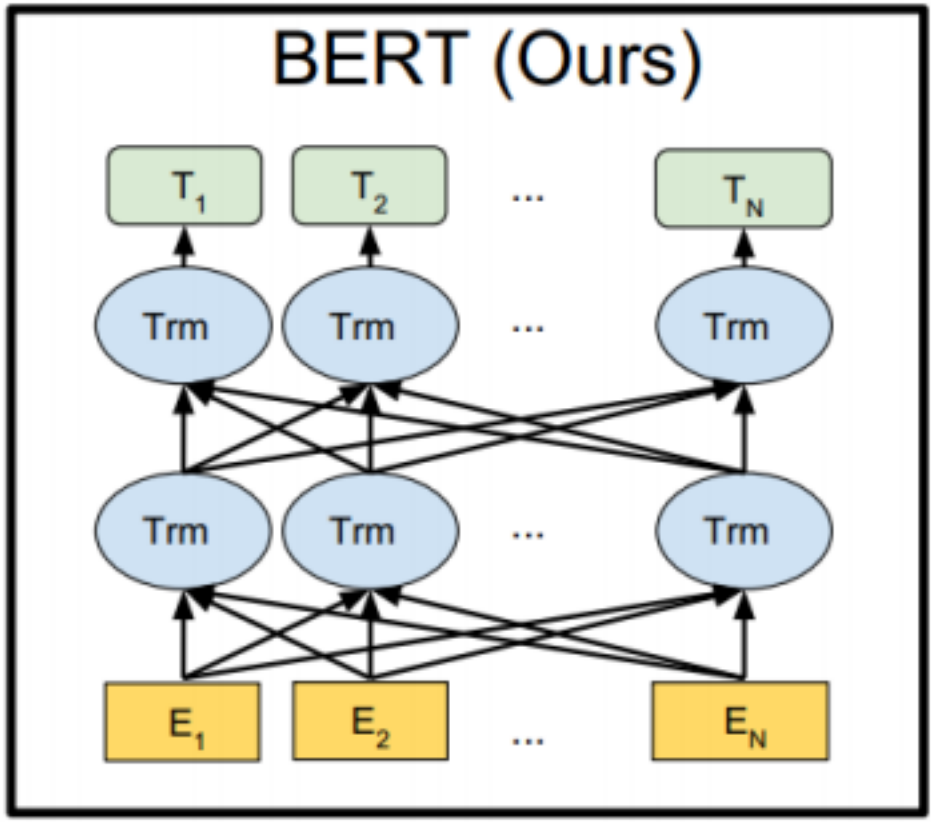

BERT

- Input Representation

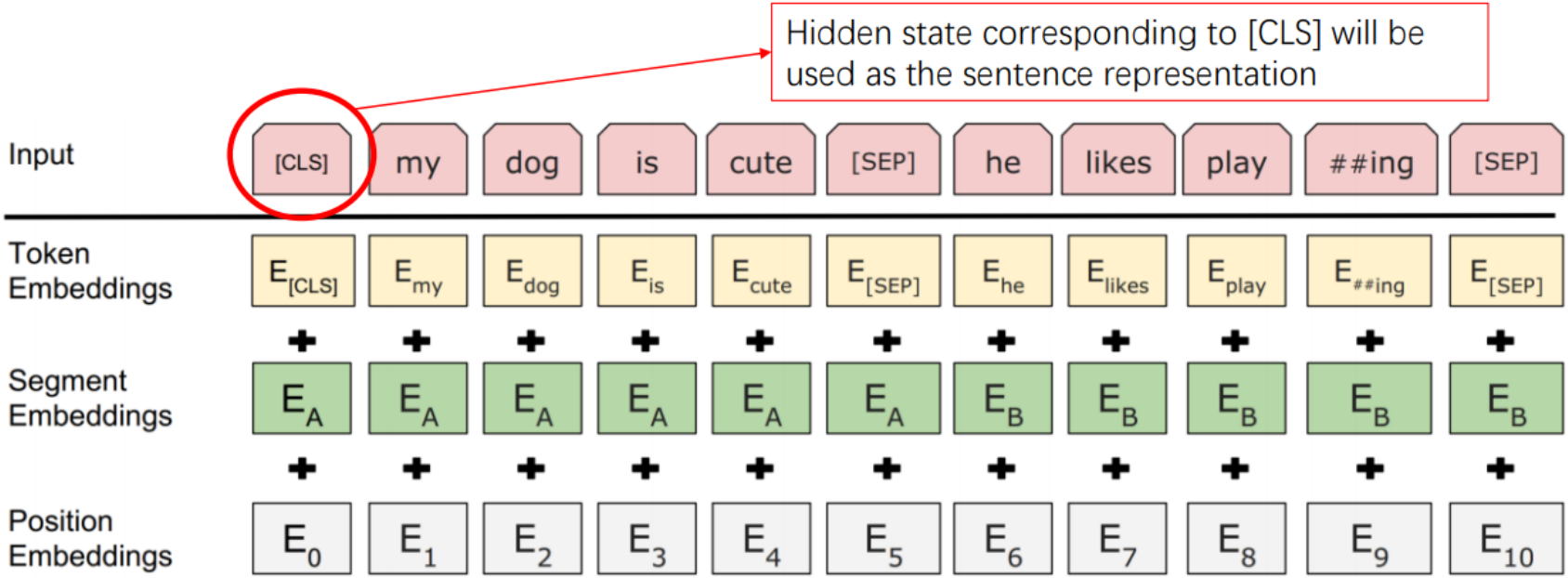

- Token Embeddings: WordPiece embedding
- Segment Embeddings: randomly initialized and learned;
  single sentence input only adds EA
- Position embeddings: randomly initialized and learned

Pre-training BERT

- Task 1: Masked Language Model(Cloze Task)

- Randomly select 15% of tokens
  - For 80% :
    - Replace the word with the [MASK] token.
  - For 10% :
    - Replace the word with a random word
  - For 10% :
    - Keep the word unchanged..

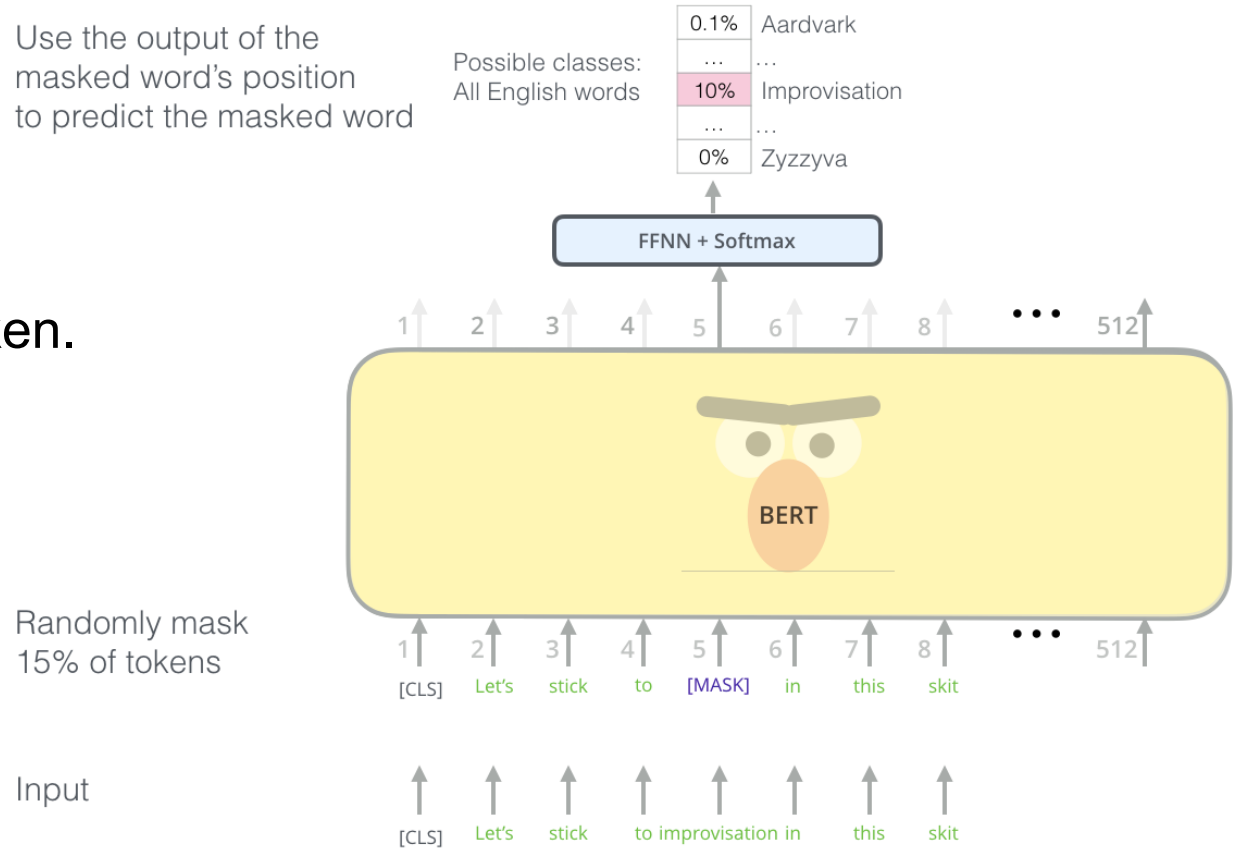

Pre-training BERT

- Task 2: Next Sentence Prediction(Binary classification)

- For every input document
  - Randomly select a split over sentences:
    - Store the segment A
    - For 50% :
      Sample random sentence split from another docume as segment B.
    - For 50% :
      Use the actual sentences as segment B.
  - Masking (Truncate([segment A, segment B]))

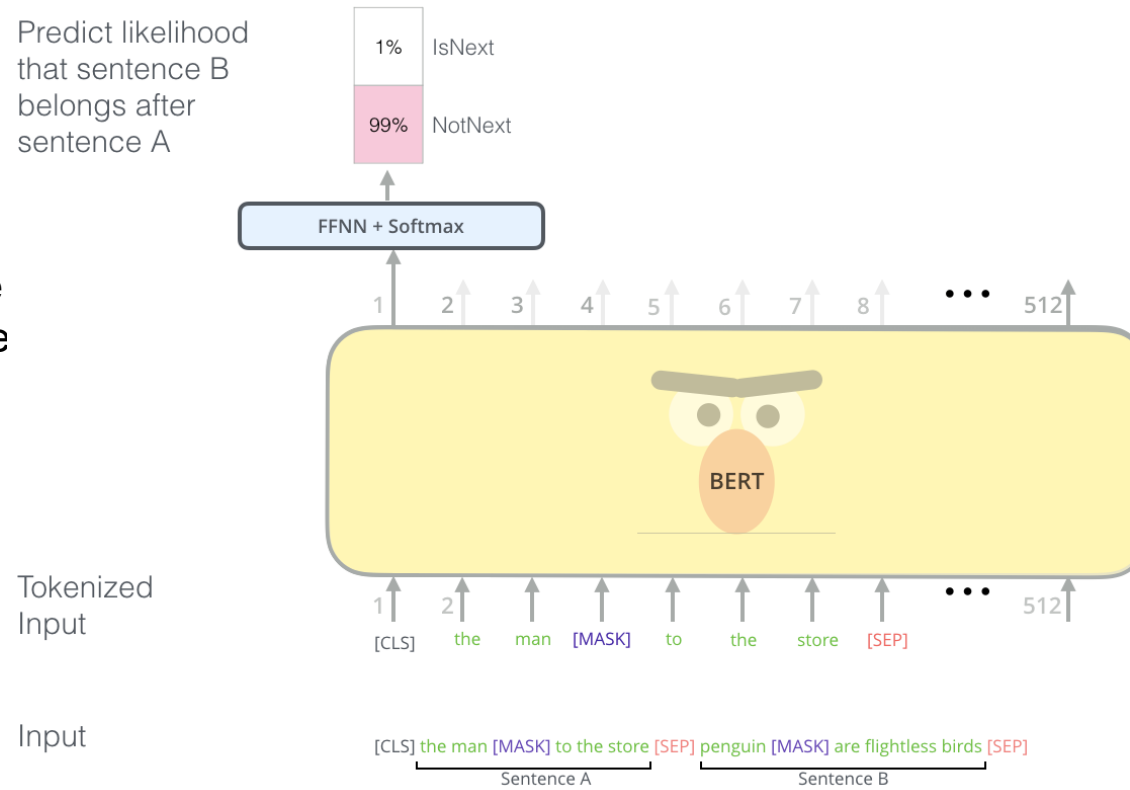

Fine-tuning with BERT

- Context vector C: Take the final hidden state corresponding to the first token in the input: [CLS].
- Transform to a probability distribution of the class labels:

$$P = \mathrm{softmax}(CW^T)$$

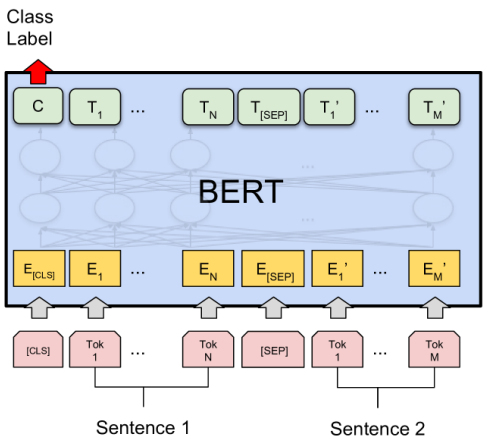

(a) Sentence Pair Classification Tasks: MNLI, QQP, QNLI, STS-B, MRPC, RTE, SWAG

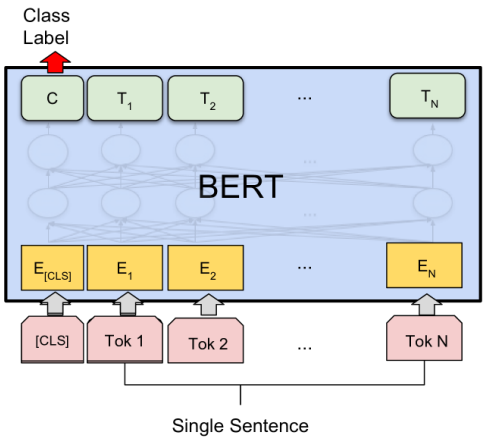

(b) Single Sentence Classification Tasks: SST-2, CoLA

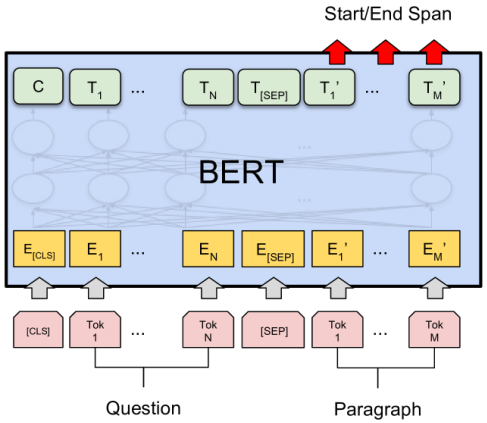

(c) Question Answering Tasks: SQuAD v1.1

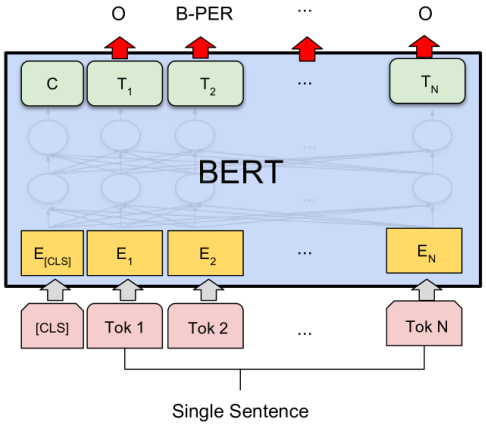

(d) Single Sentence Tagging Tasks: CoNLL-2003 NER

BERT for feature extraction

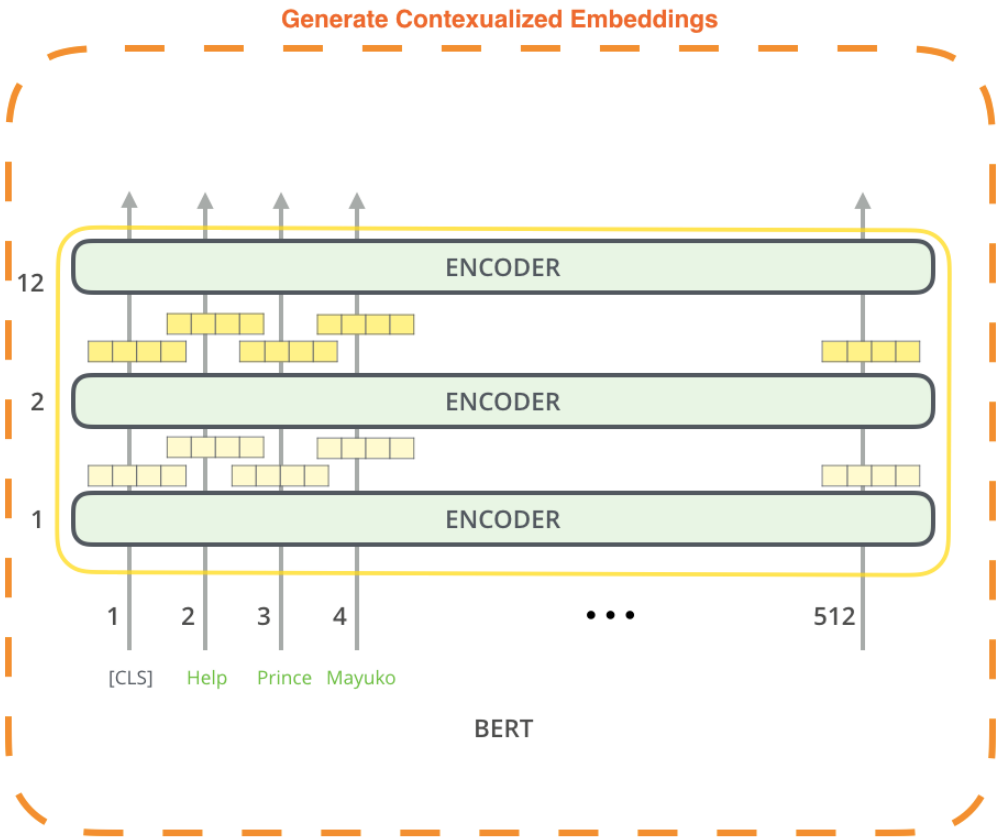

The output of each encoder layer along each token's path can be used as a feature representing that token.

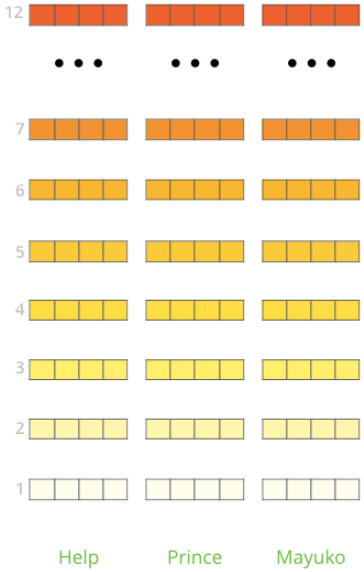

But which one should we use?

Depend on task

After BERT

- Work 1: RoCBert: Robust Chinese Bert with Multimodal Contrastive Pretraining, In ACL, 2022

Question:
pretrained language models are vulnerable to **adversarial attacks** ,especially for logographic languages like Chinese.

Attacker	Text
phonetic	克(kè)比的精神值得永远学习
visual	科此的精神值得永远学习
character split	禾斗匕匕的精神值得永远学习
synonym	我(wǒ)科(kē)的精神值得永远学习
synonym + phonetic	蜗(wō)壳(ké)的精神值得永远学习
to pinyin	kebi的精神值得永远学习
to pinyin + unicode	keb1的精神值得学习永远
swap	科比的精神值得永远习学
insertion	科比的精神九值得永远学习
deletion	科比的神值得永远学习
Original: 科(kē)比(bǐ)的精神值得永远学习	
Translation: Kobe's spirit is worth studying forever.	

An attack example

After BERT

- Work 1: RoCBert: Robust Chinese Bert with Multimodal Contrastive Pretraining, In ACL, 2022

The idea:
pre-train BERT with the contrastive learning objective by maximizing the label consistency under various adversarial examples

For one semantic embedding: $Se(c)$

Phonetic features : $Ph(c) = \sum_{k \in pinyin(c)} Ph(k)$

Visual features: $Vi(c) = \text{LayerNorm}(M^T \text{ResNet18}(I(c)))$

After BERT

- Work 2: MPC-BERT: A Pre-Trained Language Model for Multi-Party Conversation Understanding, In ACL, 2022

multi-party conversation: a hard question

need to solve: return a response, predict who will be the next and who is the addressee

Speaker	Utterance	Addressee
I.1	How can I setup if I want add new server at xchat?	-
I.2	From places, network servers, work group, his computer, and then I clicked on the shared folder.	I.1
I.3	It did not allow you to see the files?	I.2
I.2	It prompts for authentication and I don't know what to put. I tried guest with no password.	I.3
I.4	Put proper authentication in, then?	I.2
I.3	I think you had kde on suse?	I.2

Table 1: An MPC example in Ubuntu IRC channel. Here, "I." is the abbreviation of "interlocutor".

After BERT

- Work 2: MPC-BERT: A Pre-Trained Language Model for Multi-Party Conversation Understanding, In ACL, 2022

Current PTMs:

Overlook the **inherent relationships** between utterances and interlocutors

Ignore the **relationships** between **subtasks** in MPC

Key idea:

For MPC, **design self-supervised tasks** for PLMs

After BERT

- Work 2: MPC-BERT: A Pre-Trained Language Model for Multi-Party Conversation Understanding, In ACL, 2022

MPC instance: $(speaker,\ utterance,\ addressee)$

Defined as : $\{(s_n, u_n, a_n)\}_{n=1}^{N}$

Target: PTM produces embedding vectors for all utterances

the semantic information + the speaker and addressee structure

After BERT

- Work 2: MPC-BERT: A Pre-Trained Language Model for Multi-Party Conversation Understanding, In ACL, 2022

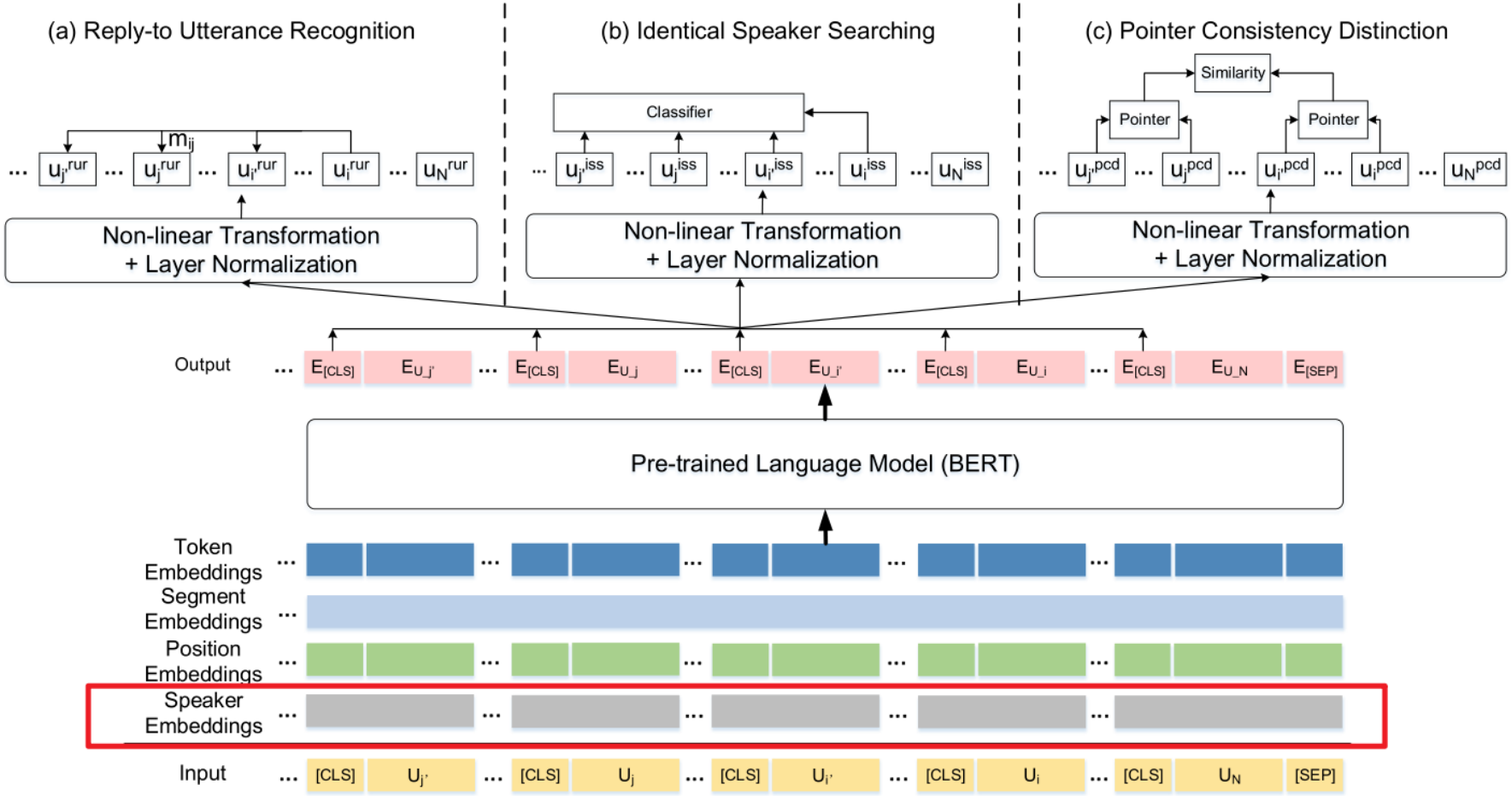

After BERT

- Work 2: MPC-BERT: A Pre-Trained Language Model for Multi-Party Conversation Understanding, In ACL, 2022
- Pre-training task1: Reply-to Utterance Recognition
  - Target: recognize the addressee of each utterance
- Pre-training task2: Identical Speaker Searching
  - Target: know who is the speaker of an utterance
- Pre-training task3: Identical Speaker Searching
  - Target: jointly model speakers and addressees in MPC

After BERT

- Work 2: MPC-BERT: A Pre-Trained Language Model for Multi-Party Conversation Understanding, In ACL, 2022
- Pre-training task4: Masked Shared Utterance Restoration
  - Target: recognize shared utterance
- Pre-training task5: Shared Node Detection
  - Target: measue the semantic relevance of two sub-conversations

Outline

- From rules to statistics
- Big Data，Big Model
- Pre-trained language model
- Pre-trained vision model
- Pre-trained multimodal model
- What can PTMs do?

MoCo V1

- Work : Momentum Contrast for Unsupervised Visual Representation Learning, In CVPR, 2020

- Motivation
  - Unsupervised Learning
  - Contrastive learning
  - Backbone: CNN

MoCo V1

- Contrastive Learning Visualization

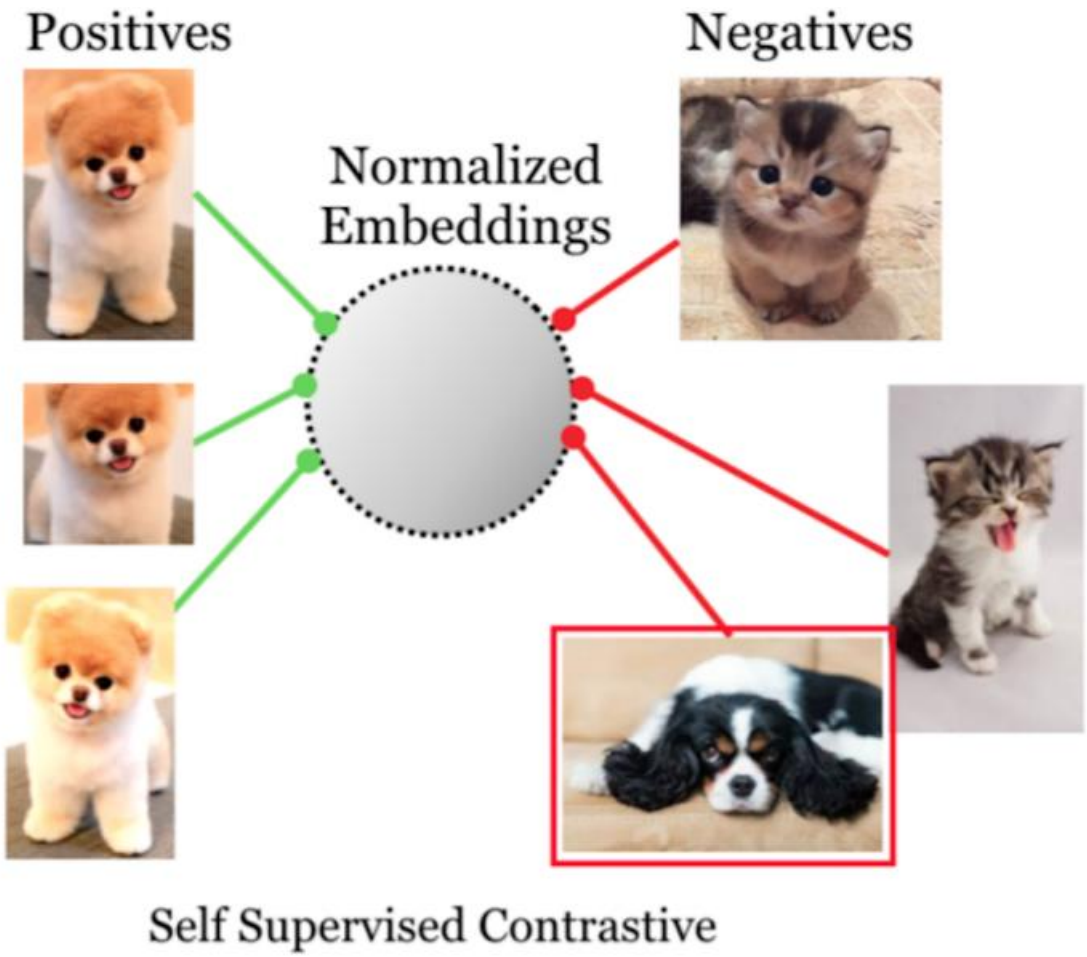

MoCo V1

- Contrastive loss

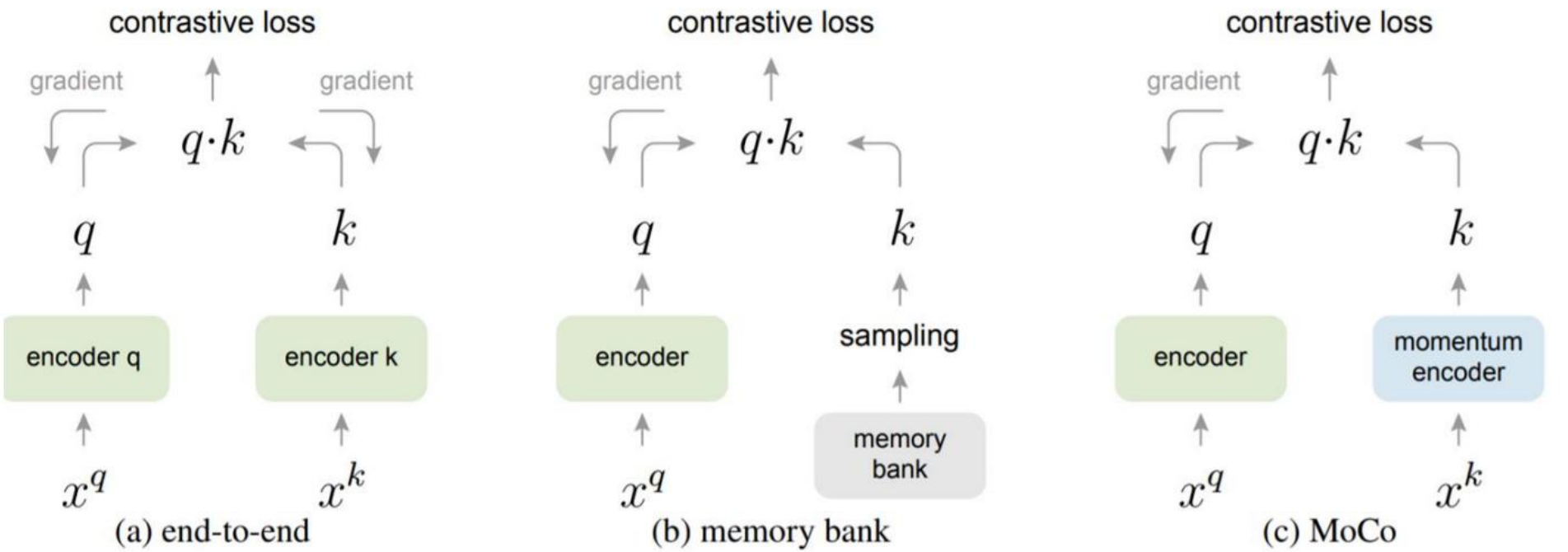

Encoder q and k are **different**.

The representation of a sample in memory bank is **updated when it was last seen**.

compare with (a) → consistent
compare with (b) → large

MoCo V1

- Contrastive loss: end to end

  - The encoders for computing the query and key representations are updated end-to-end by back-propagation (the two encoders can be different).

  - Shortcoming: Problematic when there are many negative samples.

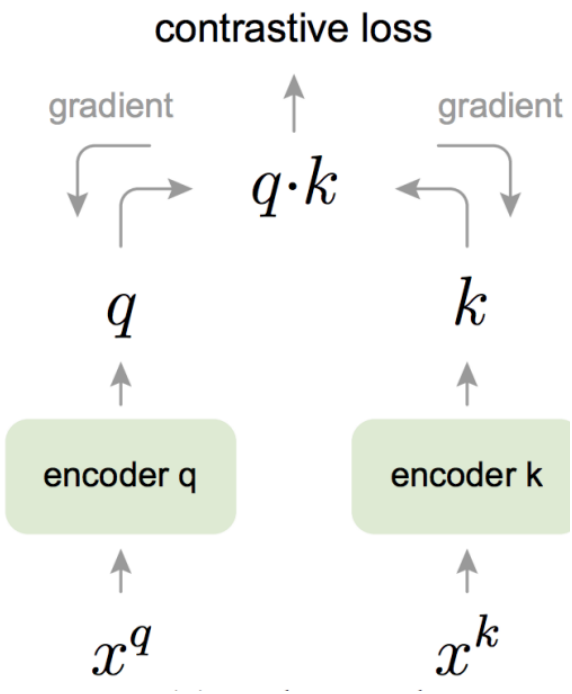

MoCo V1

- Contrastive loss: memory bank

  - The key representations are sampled from a memory bank. The representation of a sample in the memory bank was updated when it wa last seen.

  - Shortcoming: The sampled keys are essentially about the encoders at multiple different steps all over the past epoch and thus are less consistent.

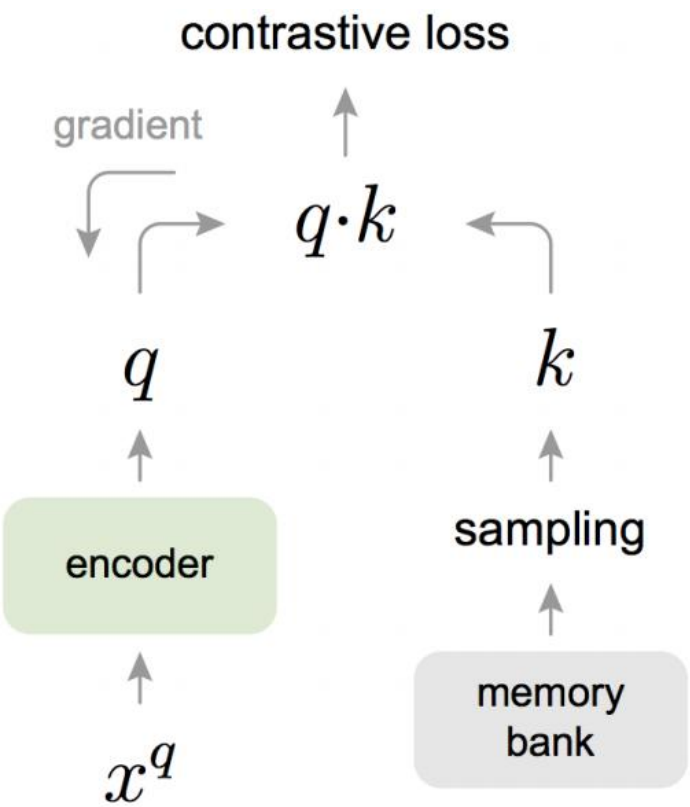

MoCo V1

- Contrastive loss: MoCo
  - Key Idea: Consistently but progressively update negative samples. MoCo encodes the new keys on-the-fly by a momentum-updated encoder, and maintains a queue of keys.
  - Formally, denoting the parameters of fk as θk and those of fq as θq, we update θk by:

$$\theta_{\mathrm{k}} \leftarrow m\theta_{\mathrm{k}} + (1-m)\theta_{\mathrm{q}}.$$

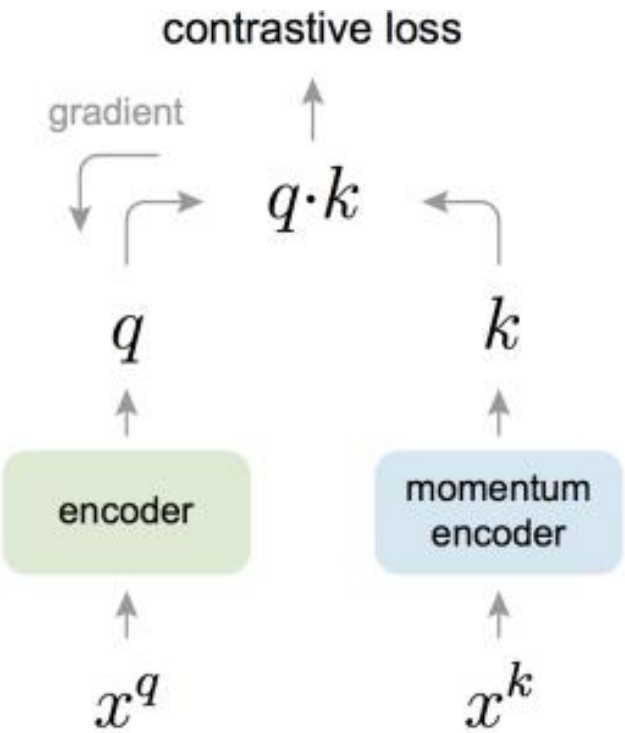

MAE

- Work : Masked Autoencoders Are Scalable Vision Learners, In CVPR, 2022

- Motivation: self-supervised learning in VISION

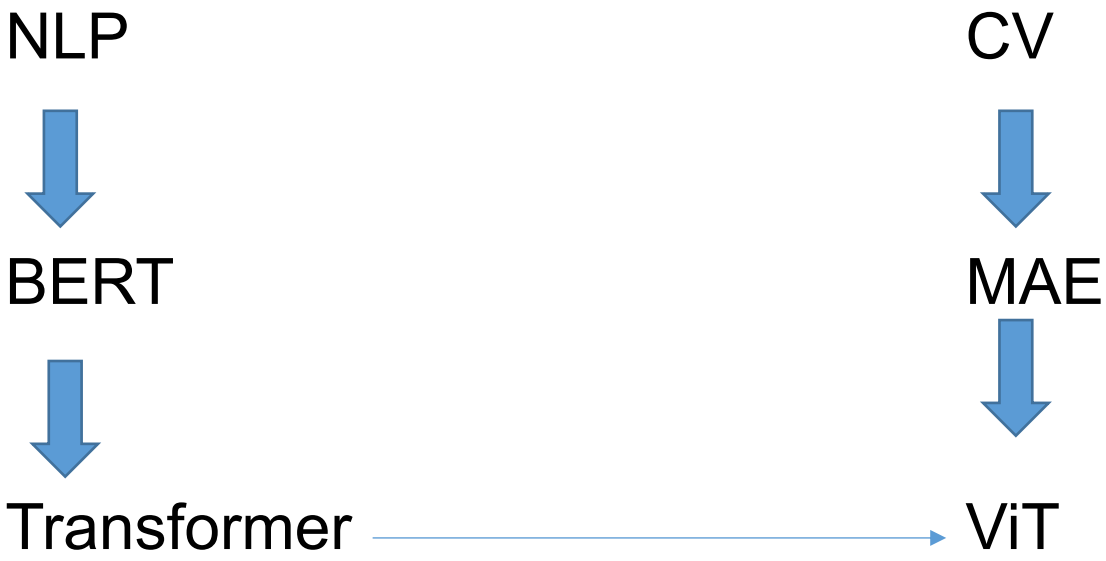

MAE

- Masked Autoencoder (MAE)
  - MAE are scalable self-supervised learners for computer vision
  - Mask random patches of the input image and reconstruct the missing pixels
  - Accelerate training (by 3x or more) and improves accuracy
  - Transfer performance in downstream tasks outperforms supervised pre training and shows promising scaling behavior
  - Learning high-capacity models that generalizes well
    - Vanilla ViT-H achieves the best accuracy (87.8%) among methods that use only ImageNet-1K data

MAE

- Masked Language Modeling
  - Success of self-supervised pre-training in **NLP**
  - Method: remove a portion of the input sequence and learn to predict the missing content
  - These methods have been shown to scale excellently
  - These pre-trained representations generalize well to various downstream tasks

MAE

- Autoencoder
  - Encoder maps an input to a latent representation
  - Decoder reconstructs the input
    - E.g.t PCA and k-means are autoencoders
  - Denoising autoencoders (DAE) are a class of autoencoders that corrupt an input signal and learn to reconstruct the original, uncorrupted signal
  - A series of methods can be thought of as a generalized DAE under different corruptions, e.g., masking pixels or removing color channels

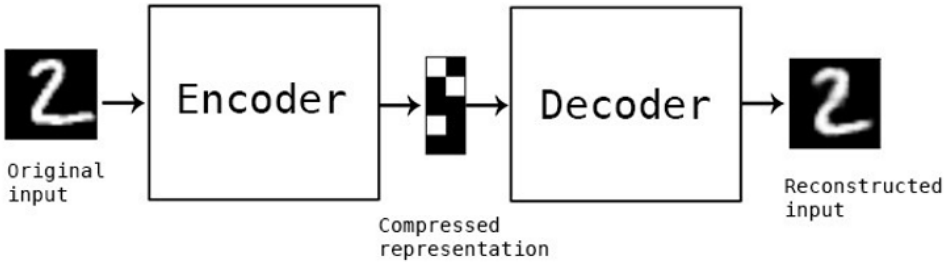

MAE

- Difference between language and vision
  - Architectural Gap
    - It is not straightforward to integrate ‘indicators’ such as mask tokens or positional embeddings into convolutional networks
    - Solution:ViT
  - Information Density
    - Language: human-generated signals, highly semantic, information-dense, Need sophisticated language understanding to train a model to predict only a few missing words per sentence
    - Images: natural signals, heavy spatial redundancy, A missing patch can be recovered from neighboring patches with little high-level understanding of parts, objects, and scenes
    - Solution:masking a very high portion of random patches
  - The Role of Autoencoder’s Decoder
    - Language: decoder predicts missing words that contain rich semantic information
    - Image: decoder reconstructs pixels, hence its output is of a lower semantic level than common recognition tasks

MAE

- MAE Encoder Decoder Architecture

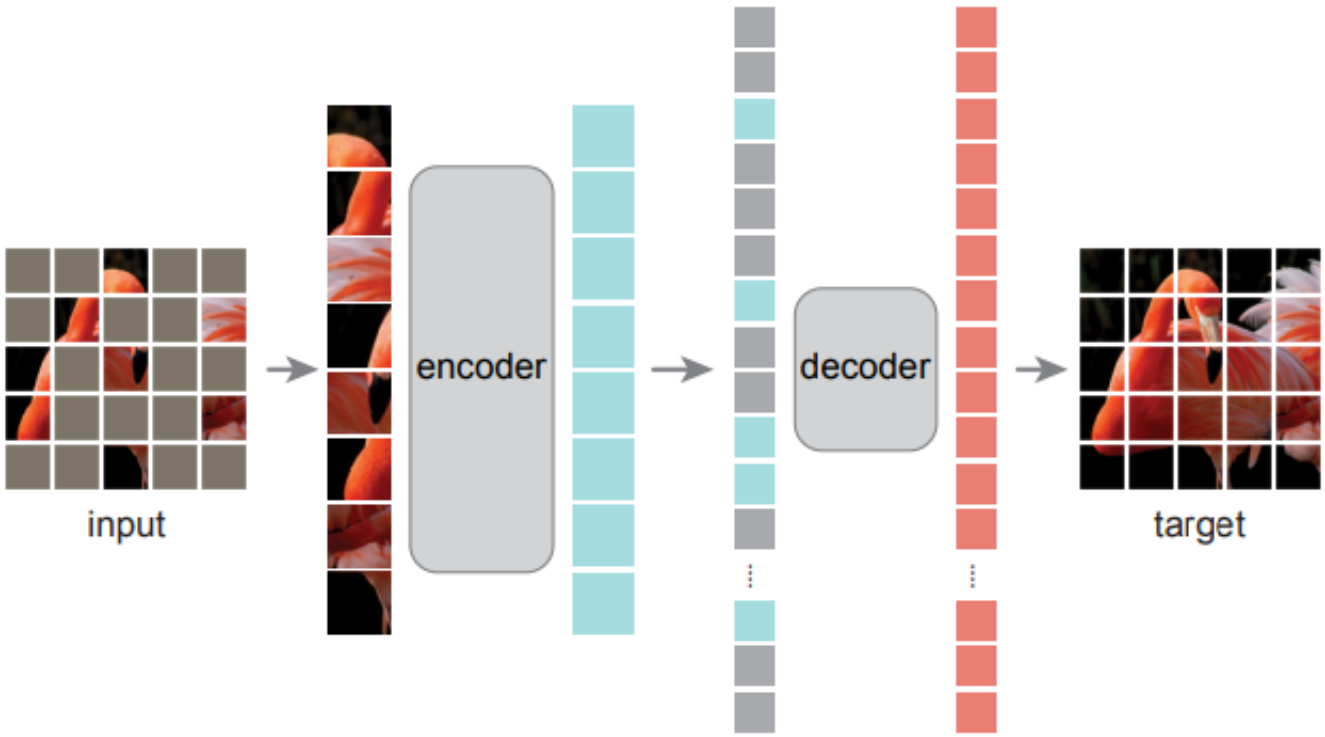

MAE

- Masking
  - Image is divided into regular non-overlapping patches
  - Sample a subset of patches and mask (i.e., remove) the remaining ones
  - High masking ratio (e.g., 75%)
- MAE encoder
  - Encoder is a ViT but applied only on visible, unmasked patches
  - Encoder only operates on a small subset e.g,2 % of the full set
  - Masked patches are removed; No mask tokens are used
  - This allows us to train very large encoders with only a fraction of compute and memory
- MAE decoder
  - The input to the MAE decoder is the full set of tokens consisting of encoded visible patches and mask tokens
  - Positional embeddings are added to all tokens in this full set
  - MAE decoder is only used during pre-training to perform the image reconstruction task (only the encoder is used to produce image representations for recognition)
  - Decoder has <10% computation per token vs. the encoder

MAE

- Mask policy

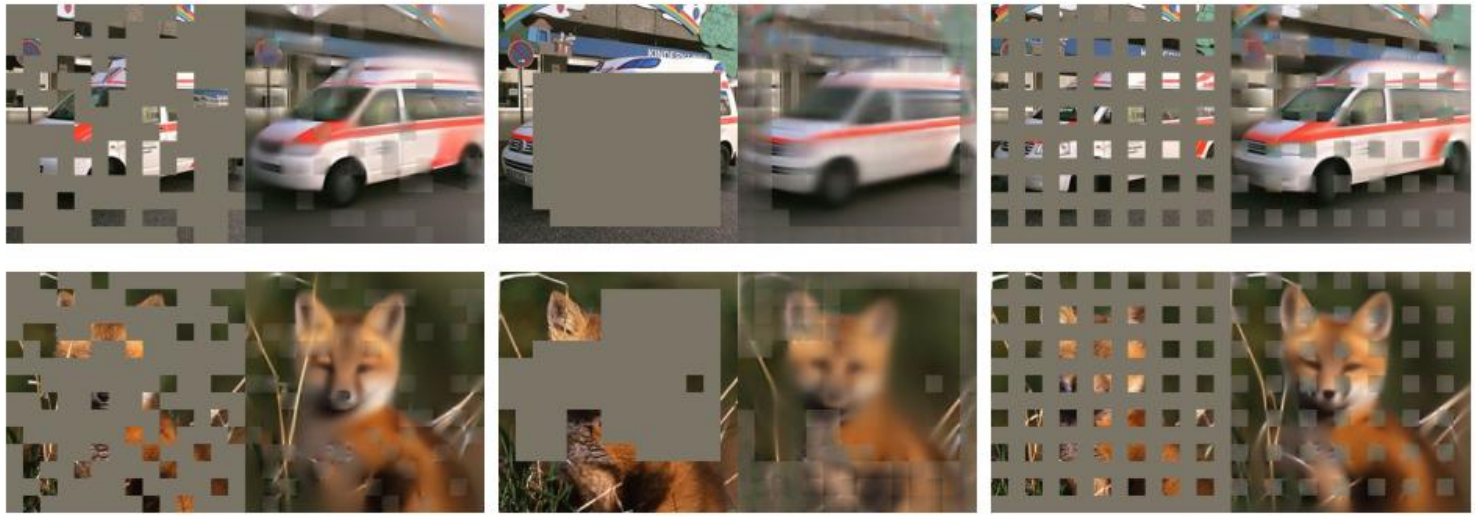

random 75% block 50% grid 75%

Best policy: randomly mask

MAE

- Simple Implementation

1. Generate a token for every input patch
2. Randomly shuffle the list of tokens and remove the last portion of the list
3. After encoding, mask tokens are appended to the list of encoded patches, and unshuffle the full list (inverting the random shuffle operation)
4. The decoder is applied to this full list (with positional embeddings added)

MAE

- MAE Reconstruction
  - COCO validation images (pre-trained on ImageNet)

After MAE

- Work1: Masked Autoencoders are Robust Data Augmentors

Current data augmentors method :

1. linear transformations(insufficiently generalize input distribution)
2. GAN(uncertain and unstable)

Target: make the generation more controllable(by MAE idea)

After MAE

- Work1: Masked Autoencoders are Robust Data Augmentors

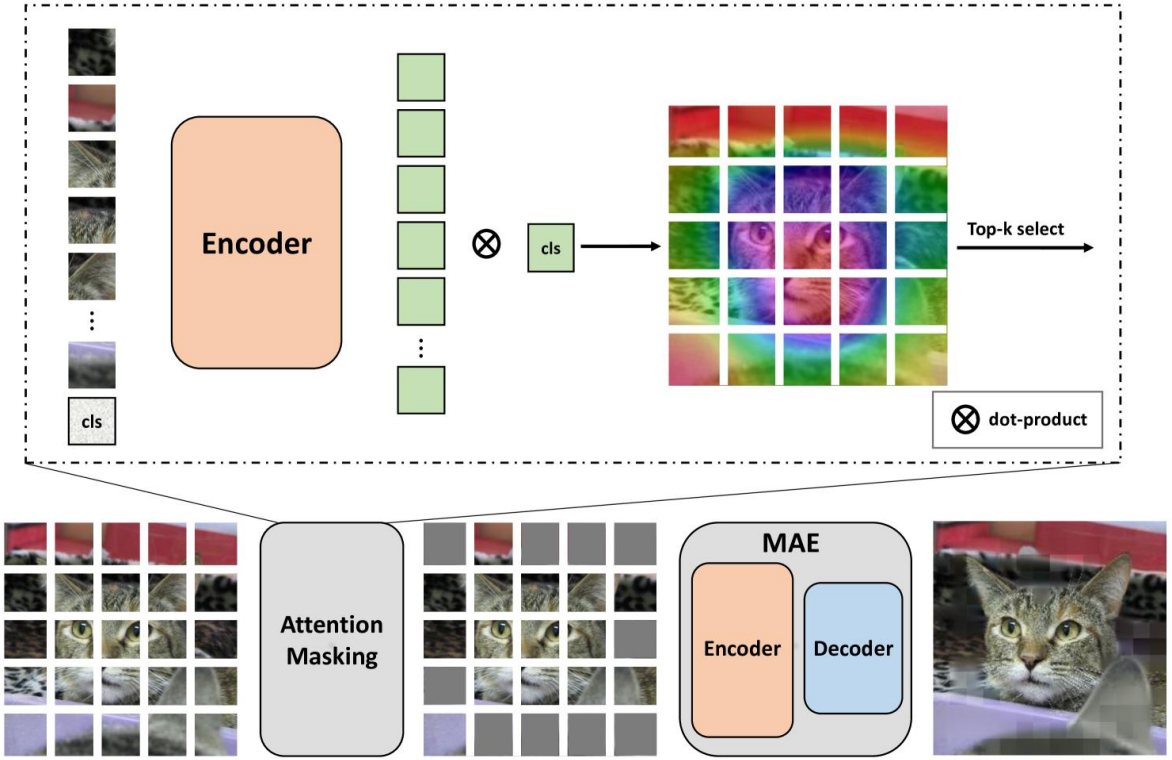

Idea: Mask-Reconstruct Augmentation

After MAE

- Work2: MaskOCR: Text Recognition with Masked Encoder-Decoder Pretraining

Main idea: using encoder-decoder transformer

Encoder: extracts the patch-level representations

Decoder: recognizes the text from the representations

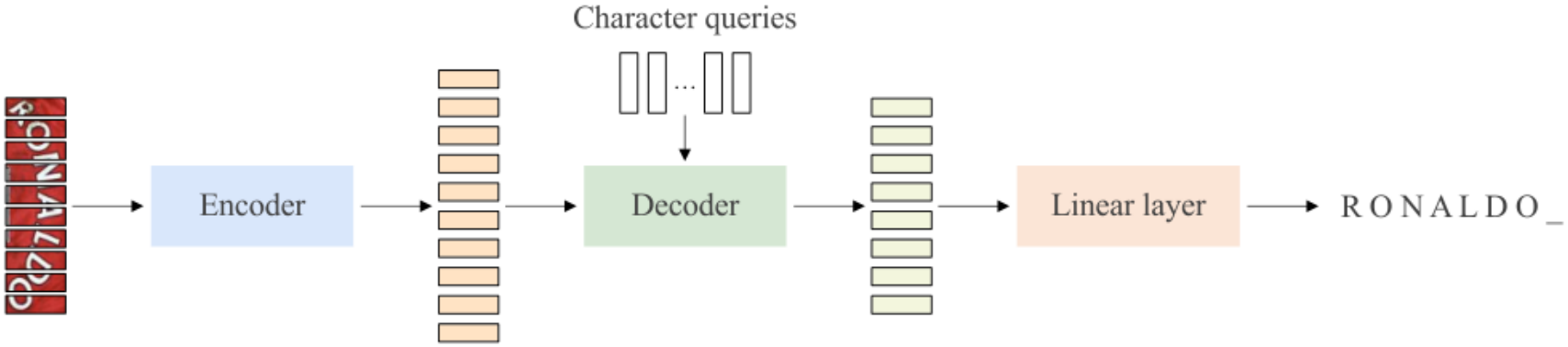

After MAE

- Work2: MaskOCR: Text Recognition with Masked Encoder-Decoder Pretraining

Encoder:

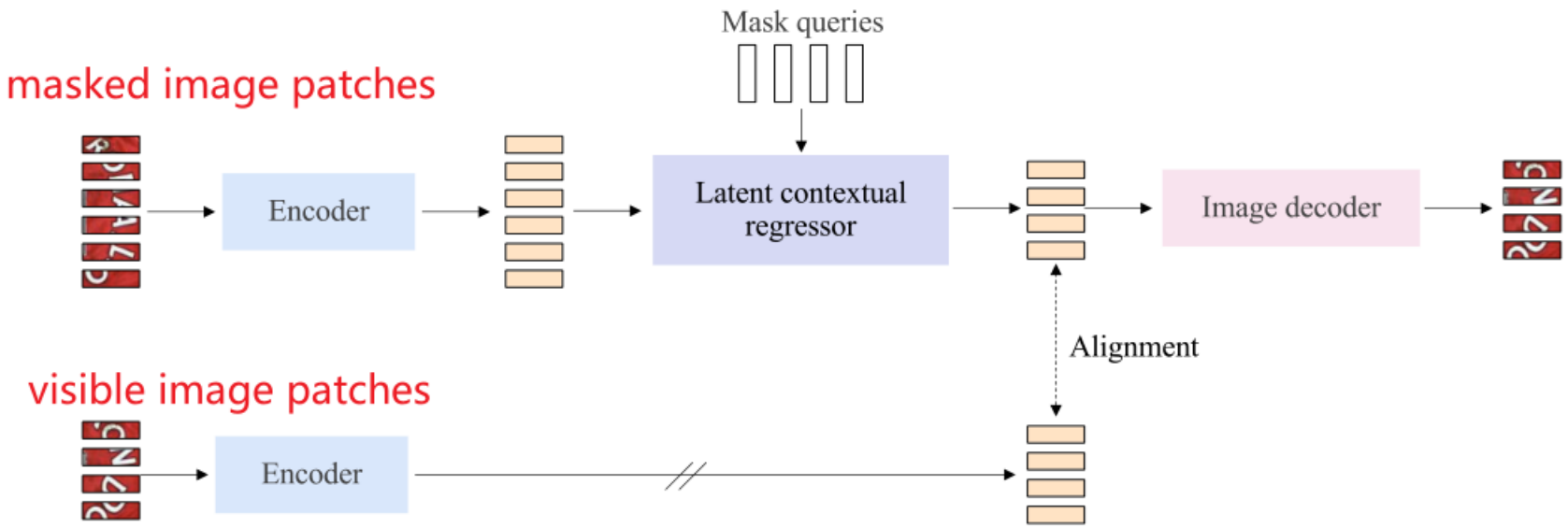

After MAE

- Work2: MaskOCR: Text Recognition with Masked Encoder-Decoder Pretraining

Decoder:

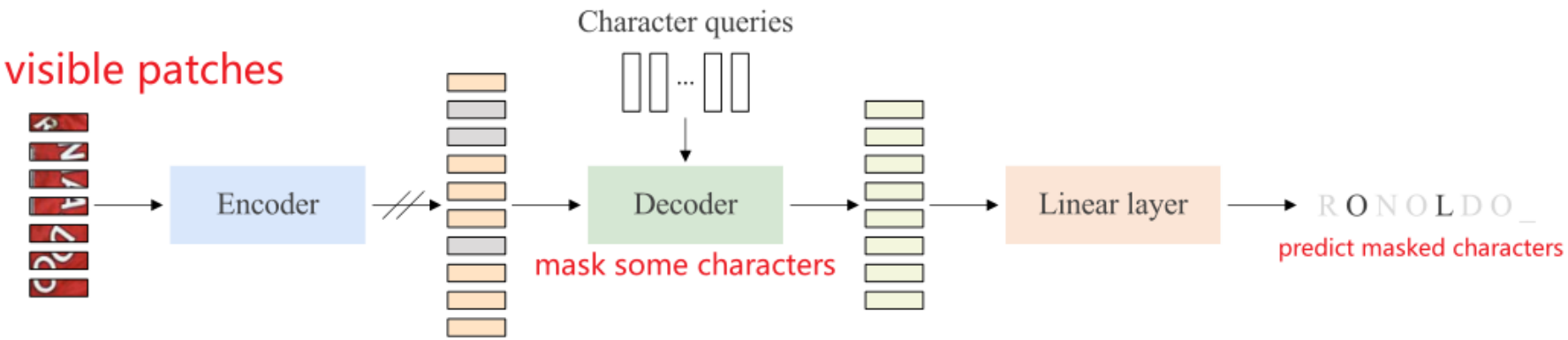

Outline

- From rules to statistics
- Big Data，Big Model
- Pre-trained language model
- Pre-trained vision model
- Pre-trained multimodal model
- What else can PTMs do?

CLIP

- Work : Contrastive Language–Image Pre-training, In ICML, 2021
- Keypoint
  - a network which can be directly used for image classification
  - suitable for zero-shot learning
  - classification accuracy is more robust

CLIP

- Train Model

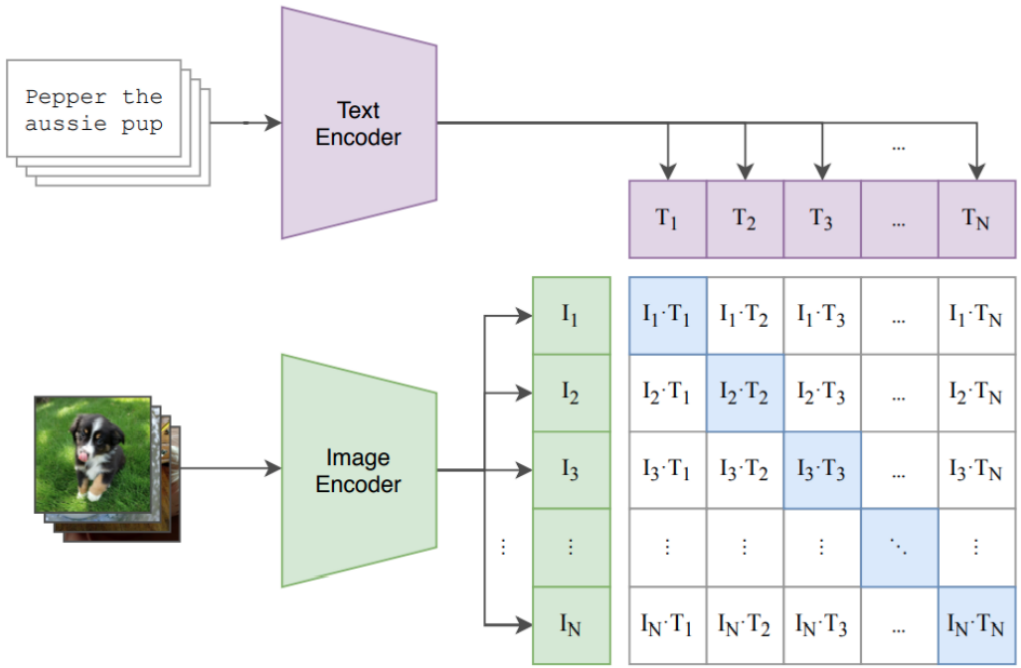

Contrastive Pre-training of language-image pairs.
The text encoder is a standard transformer encoder.
The extracted feature is the embedding of the CLS token.(ResNet/ViT)

$$min(\sum_{i=1}^{N}\sum_{j=1}^{N}(I_i \cdot T_j)_{(i \neq j)} - \sum_{i=1}^{N}(I_i \cdot T_i))$$

CLIP

- Usage

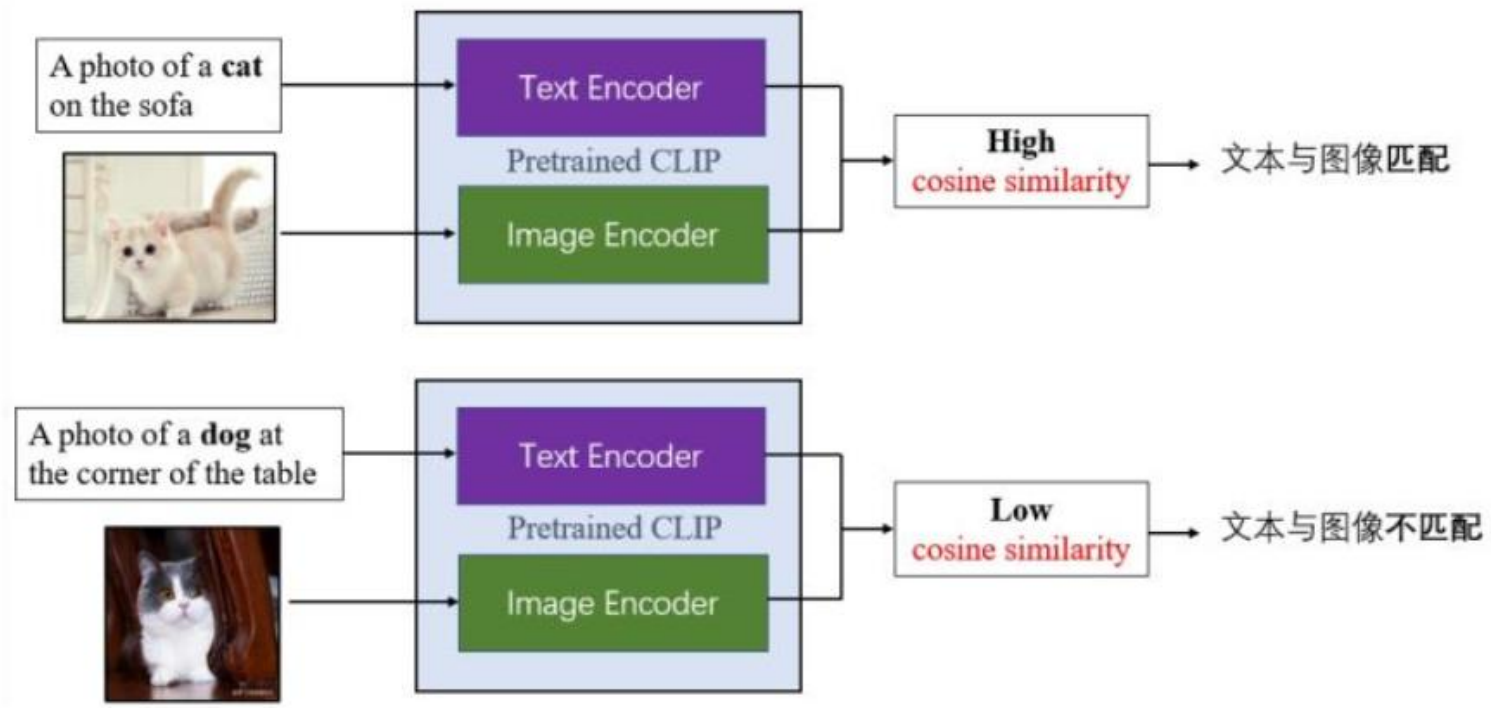
A photo of a **cat** on the sofa
Text Encoder
Pretrained CLIP
Image Encoder
High
cosine similarity
文本与图像匹配
A photo of a **dog** at the corner of the table
Text Encoder
Pretrained CLIP
Image Encoder
Low
cosine similarity
文本与图像不匹配

CLIP

- Zero-shot image classification

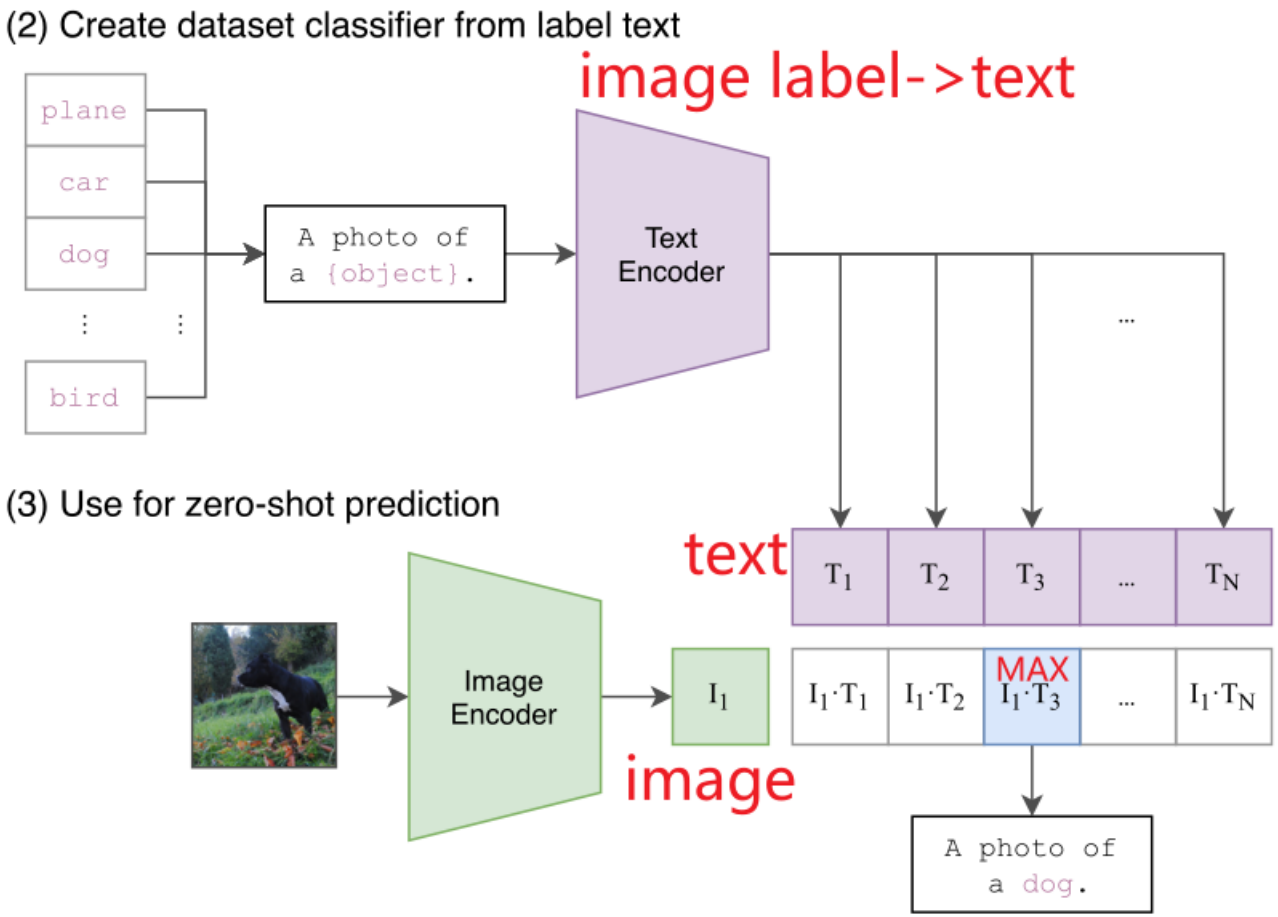

CLIP

- How Well Does CLIP Do on Zero-shot Classification?

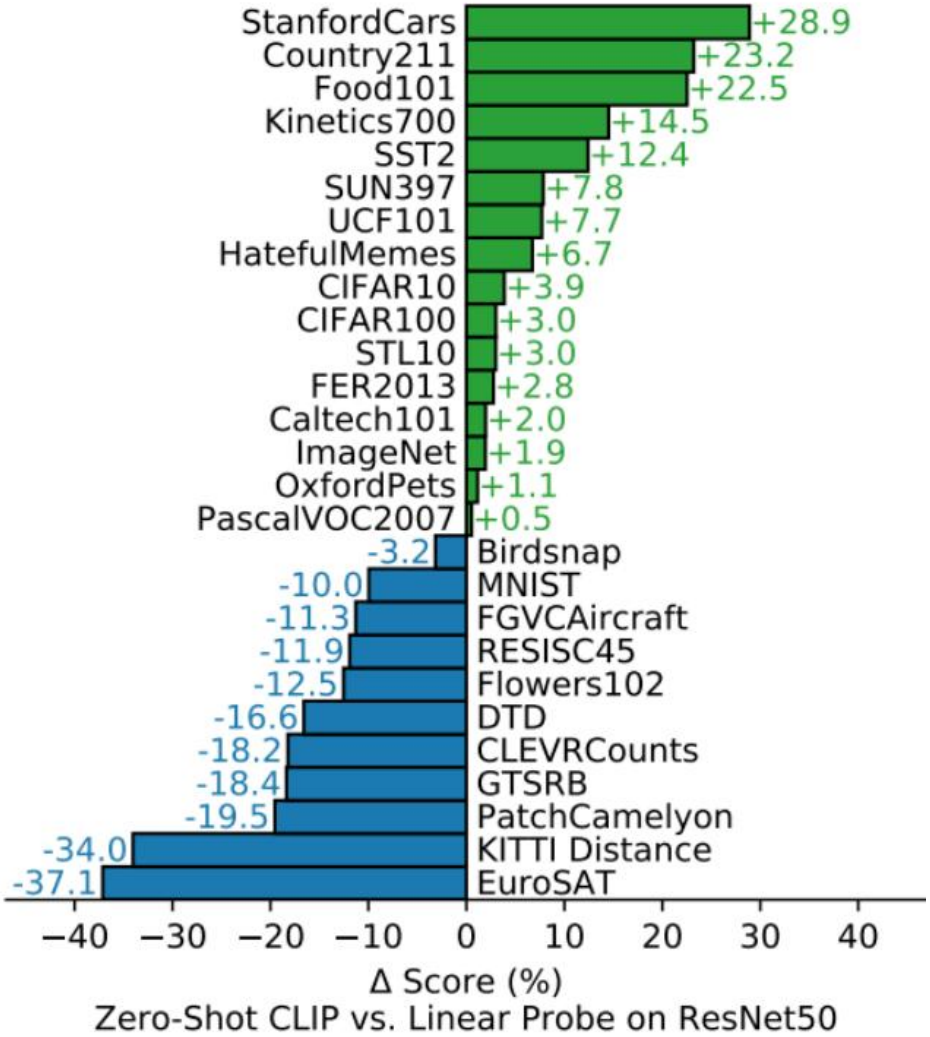

Applications of CLIP

- StyleCLIP (Patashnik et al.)

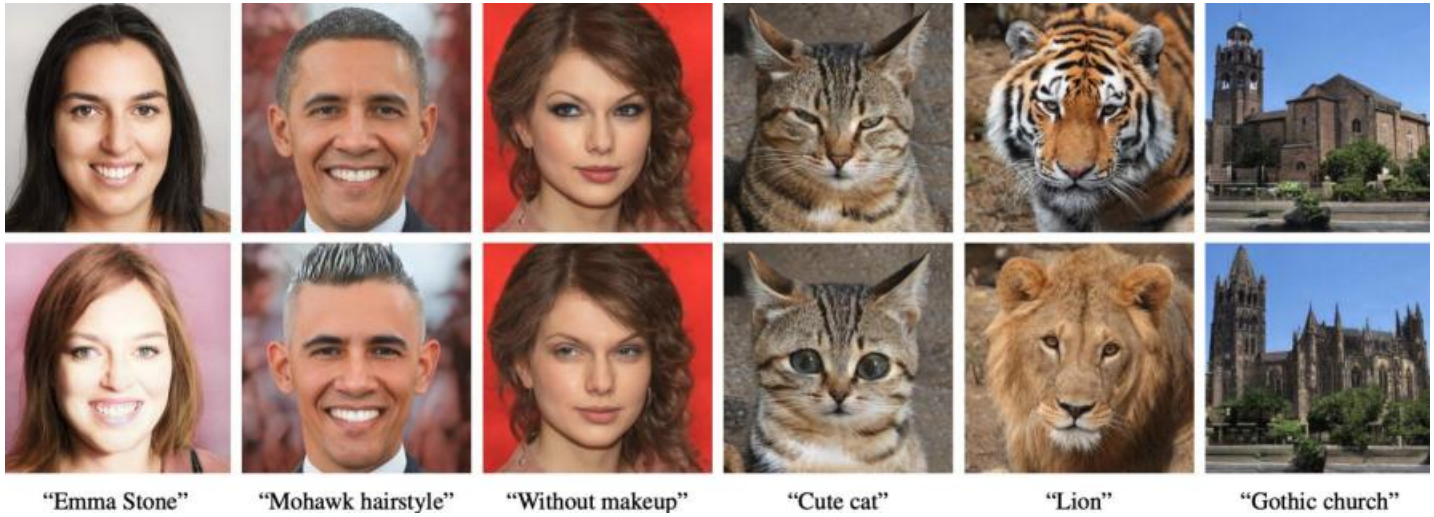

Steering a GAN Using CLIP

Applications of CLIP

- CLIP4Clip (Luo & Ji, et al.)

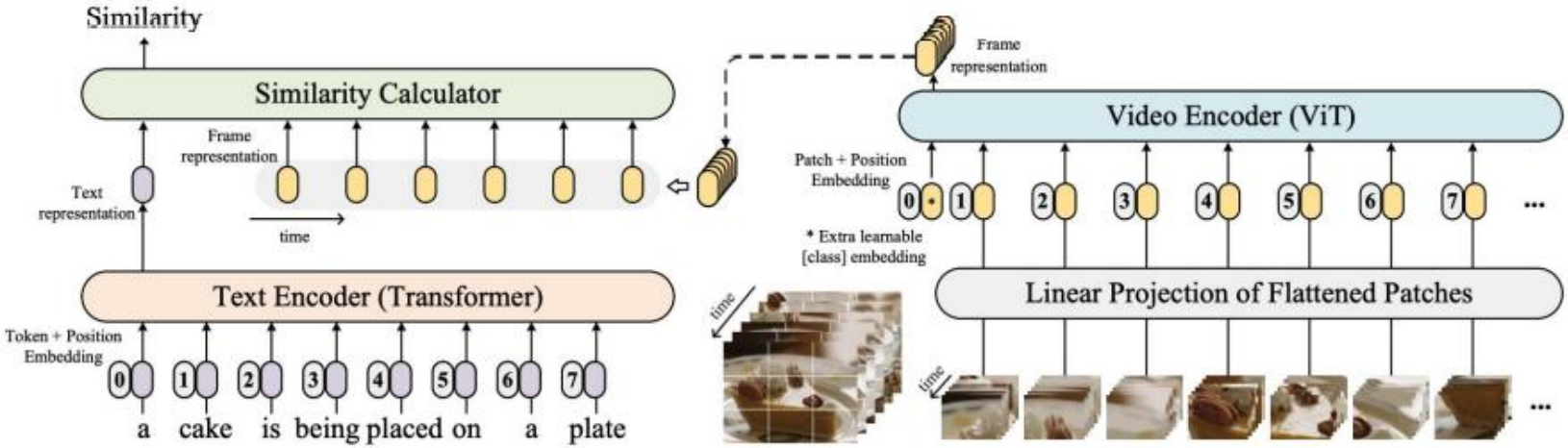

Video retrieval using CLIP features

Outline

- From rules to statistics
- Big Data，Big Model
- Pre-trained language model
- Pre-trained vision model
- Pre-trained multimodal model
- What else can PTMs do?

Applications of PTMs

- NLP tasks: BERT, GPT, …….
- CV tasks: MAE, CLIP, BLIP, ……
- Else tasks?

Example of PTMs application

- Work : The (Un)Surprising Effectiveness of Pre-Trained Vision Models for Control, In ICML, 2022
- Application: policy learning for control

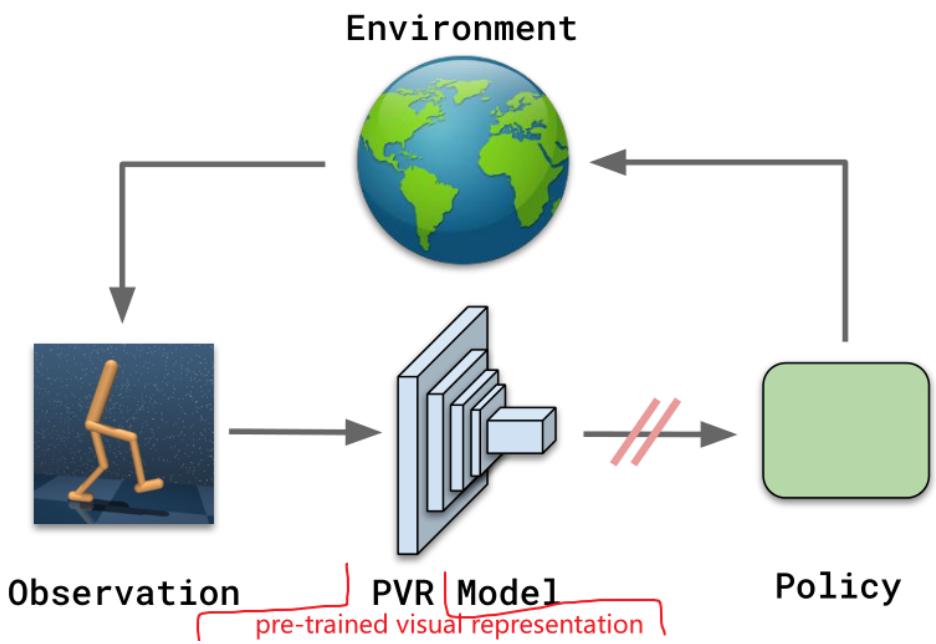

Example of PTMs application

- Work : The (Un)Surprising Effectiveness of Pre-Trained Vision Models for Control, In ICML, 2022
- MuJoCo tasks: hand manipulation behaviors and locomotion

Adroit Pen | Adroit Relocate | DMC Finger Spin | DMC Cheetah | DMC Reacher | DMC Walker | Franka Kitchen

- Habitat tasks: reach target locations from anywhere on the scene

Apartment 0 | Office 0 | Room 0 | FRL Apartment 0 | Hotel 0

Example of PTMs application

- Work : The (Un)Surprising Effectiveness of Pre-Trained Vision Models for Control, In ICML, 2022

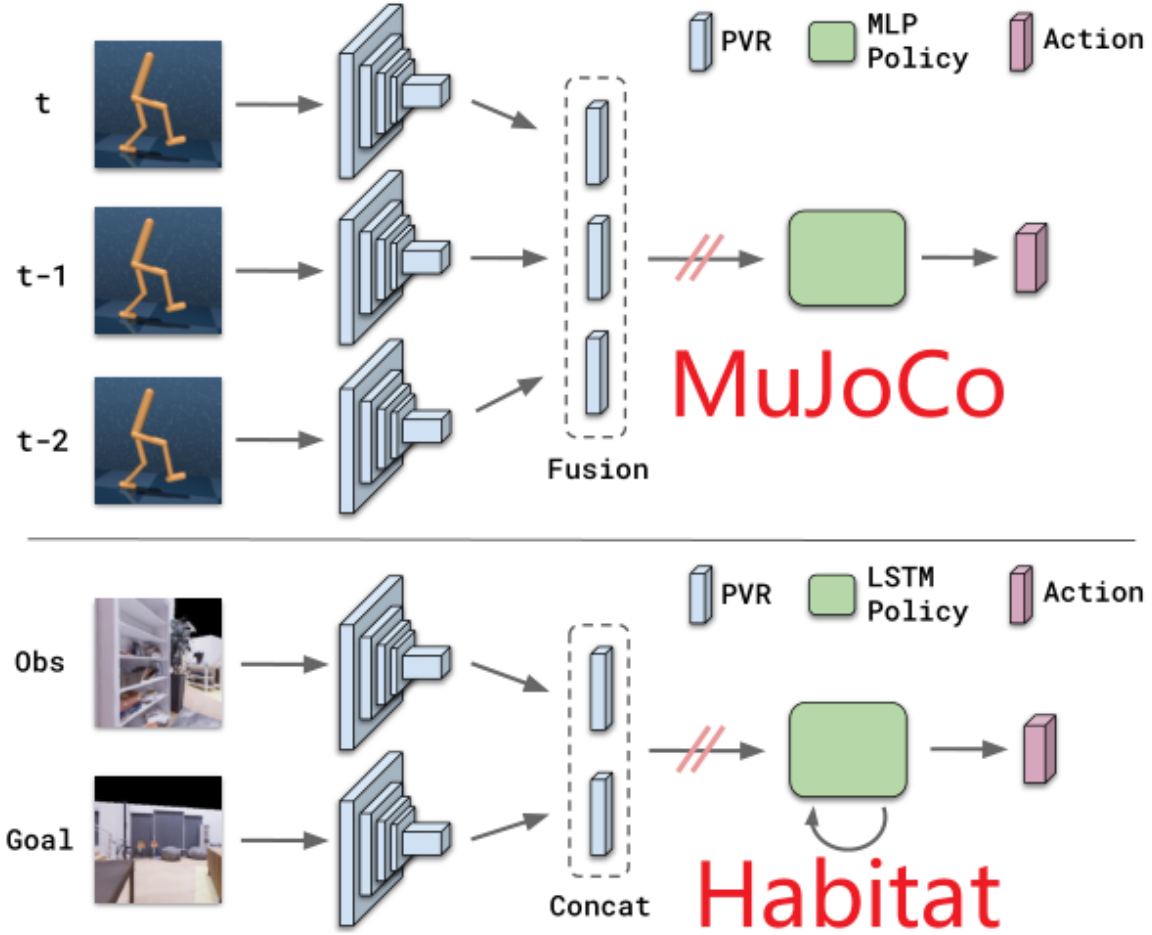

Summary

- PTMs have achieved promising results, in zero/few-shot learning scenarios(CV, NLP tasks)
- PTMs have inspired the development of other AI tasks
- How to develop PTMs next is still an open question